# OMC / TMC

phytron

## Programmable
## Stepper Motor Controller

**Manual 1165-A013 GB**

customized solutions
*in motion*

# OMC/TMC

# Programmable Stepper Motor Controller

# for One or Two Axes

**TRANSLATION OF THE GERMAN ORIGINAL MANUAL**

© 2009

All rights with:

Phytron-Elektronik GmbH

Industriestraße 12

82194 Gröbenzell, Deutschland

Tel.: +49 8142/503-0

Fax: +49 8142/503-190

Every possible care has been taken to ensure the accuracy of this technical manual. All information contained in this manual is correct to the best of our knowledge and belief but cannot be guaranteed. Furthermore we reserve the right to make improvements and enhancements to the manual and / or the devices described herein without prior notification. You find the updated version of this manual on the website of www.phytron.de.

We appreciate suggestions and criticisms for further improvement. Please send your comments to the following email address: doku@phytron.de

## Contents


1 The OMC and TMC Stepper Motor Controllers....4
1.1 Overview....4
1.2 Structure of the Device....5
1.2.1 The Controller Board....7
1.2.2 The Stepper Motor Power Stage....7
1.2.3 Interfaces....8
1.2.4 REMOTE/LOCAL Switch....8
1.2.5 Reset Push-Button....8
1.3 Operating Modes....8
1.3.1 REMOTE/LOCAL....8
1.3.2 Stand-alone / Master-Slave / Bus Operating Mode....9
1.3.3 Address Switch....10
1.4 Options....11
1.4.1 Option SFI....11
1.4.2 Option 14-Bit AD Converter....12
2 To Consider Before Installation....14
2.1 Qualified Personnel....14
2.2 Safety Instructions....14
3 Protective Measure Options....15
4 Mechanical Installation....17
4.1 Mounting in a Switching Cabinet....17
4.2 Rail or Wall Mounting....17
4.3 Ventilation....19
5 Electrical Installation....20
5.1 Wiring Power Stage(s)....20
5.1.1 Internal Power Stage....20
5.1.2 External Power Stage....21
5.2 Stepper Motor....22
5.2.1 Wiring Schemes....23
5.2.2 Motor Cable....24
5.2.3 Motor Supply Voltage....25
5.2.4 DC....26
5.2.5 AC Supply....27
5.3 Wiring the Controller Board....28
5.3.1 Logic Supply Voltage....28
5.3.2 Limit Switches....29
5.3.3 Control Pulses Output....30
5.3.4 Control Pulses Input....30
5.3.5 Basic Position Signal....31
5.3.6 Service Interface....32
5.4 Wiring the I/O Boards....32
5.4.1 I/O Supply....33
5.4.2 Inputs....34
5.4.3 Outputs....34
5.5 Wiring the Interface Connectors....35
6 Putting into Service....38
6.1 Test the Communication between Controller and PC....38
6.2 Test: Stepper Motor(s), I/Os and Limit Switches....39
7 Operation of the OMC/TMC....42
7.1 Linear and Circular Interpolation....42
7.2 The "phytron Programming Language" MiniLog....42
7.3 Structure of the Programming Instructions....43
7.4 Design of MiniLog Programs....44
7.5 Parameters....44
7.6 About Parameters 30 and 31....50
7.7 Registers....51
7.8 Programming Instructions....52
7.9 Programming Examples....52
7.10 Storing Programs, Parameters and Registers....53
7.11 Data Transfer without MiniLog-Comm 54
8 ESD Protective Measures....55
9 Warranty and Trade Marks....55
9.1 Warranty....55
9.2 Trade Marks....55
10 Index....56

# 1 The OMC and TMC Stepper Motor Controllers

## 1.1 Overview

OMC and TMC, the intelligent motion controllers, are little, simple and compact stepper motor control units for two-phase stepper motors in the power range up to 250 W for motor currents up to 9 $A_{PEAK}$ with 70 V motor voltage.
The connection of external power stages allows to drive larger stepper motors e. g. 17 $A_{PEAK}$ at 140 V motor voltage.

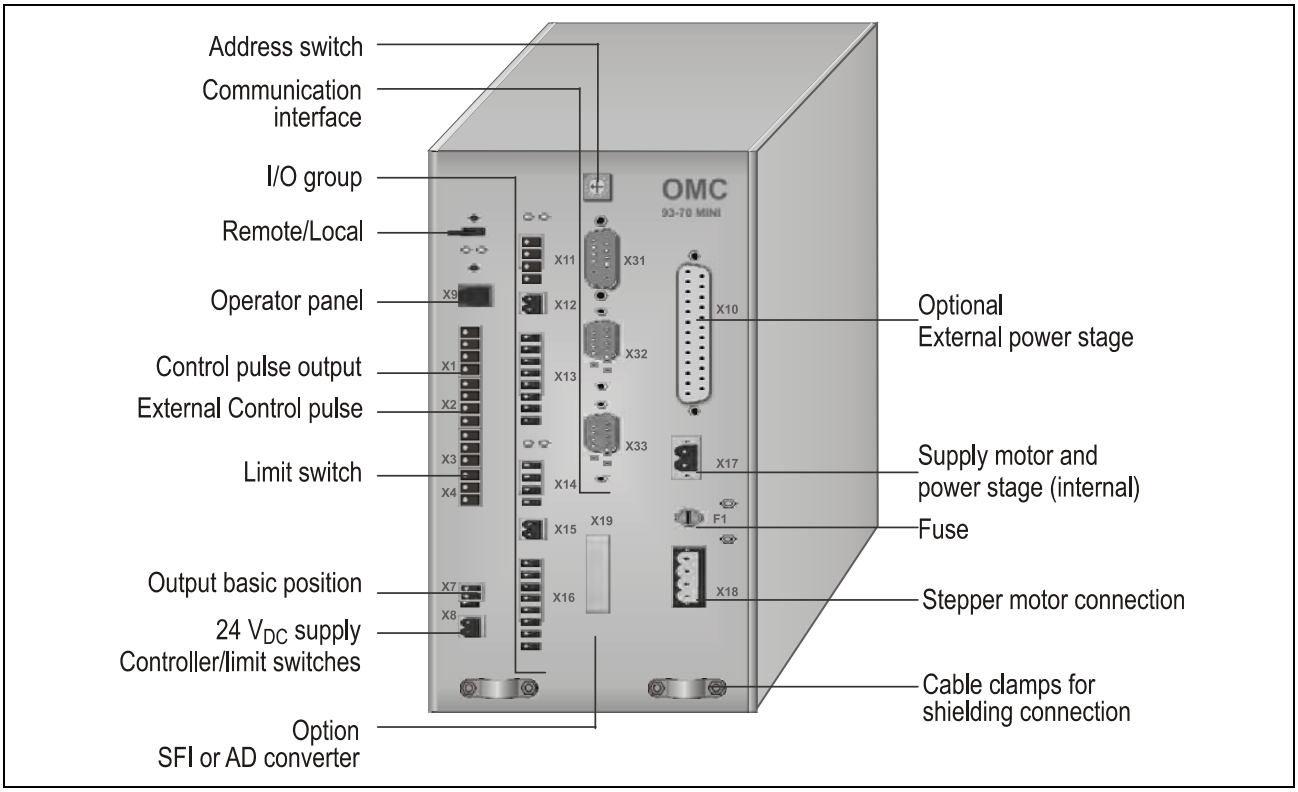


Fig. 1: OMC connection

Machine control programs can be prepared at the PC with the MiniLog-Comm communication software.

The OMC contains 16 inputs, electrically separated from the sequential controller, and eight overload-safe outputs, while TMC has 32 inputs and 16 outputs. Each axis has two signal inputs for connecting limit switches type PNP NCC.

The multi-axle operating mode can be used as master/slave mode or bus mode. In master/slave mode you can drive with one PC or operator panel up to 8 axes, in bus mode up to 30 axes.

The controllers are applicable for more complex processes and motion sequences because of the circular interpolation and the changes of frequency and target position during the run.

The power stages can be supplied by a 24 to 70 $V_{DC}$ voltage, as well as a 17 to 50 $V_{AC}$. An separate 24 $V_{DC}$ supply voltage is required for the controller board, each I/O group of 16 inputs and 8 outputs or optional fan(s).

The requirements of the EMC Directives are met without installing supplementary filters.

## 1.2 Structure of the Device

The figure below shows the TMC two-axes controller. The OMC single-axis controller is constructed similarly, but it contains only one stepper motor power stage and one I/O board with two I/O groups (each group consists of eight inputs and four outputs), as well as two 3 pole screw connectors for limit switches.

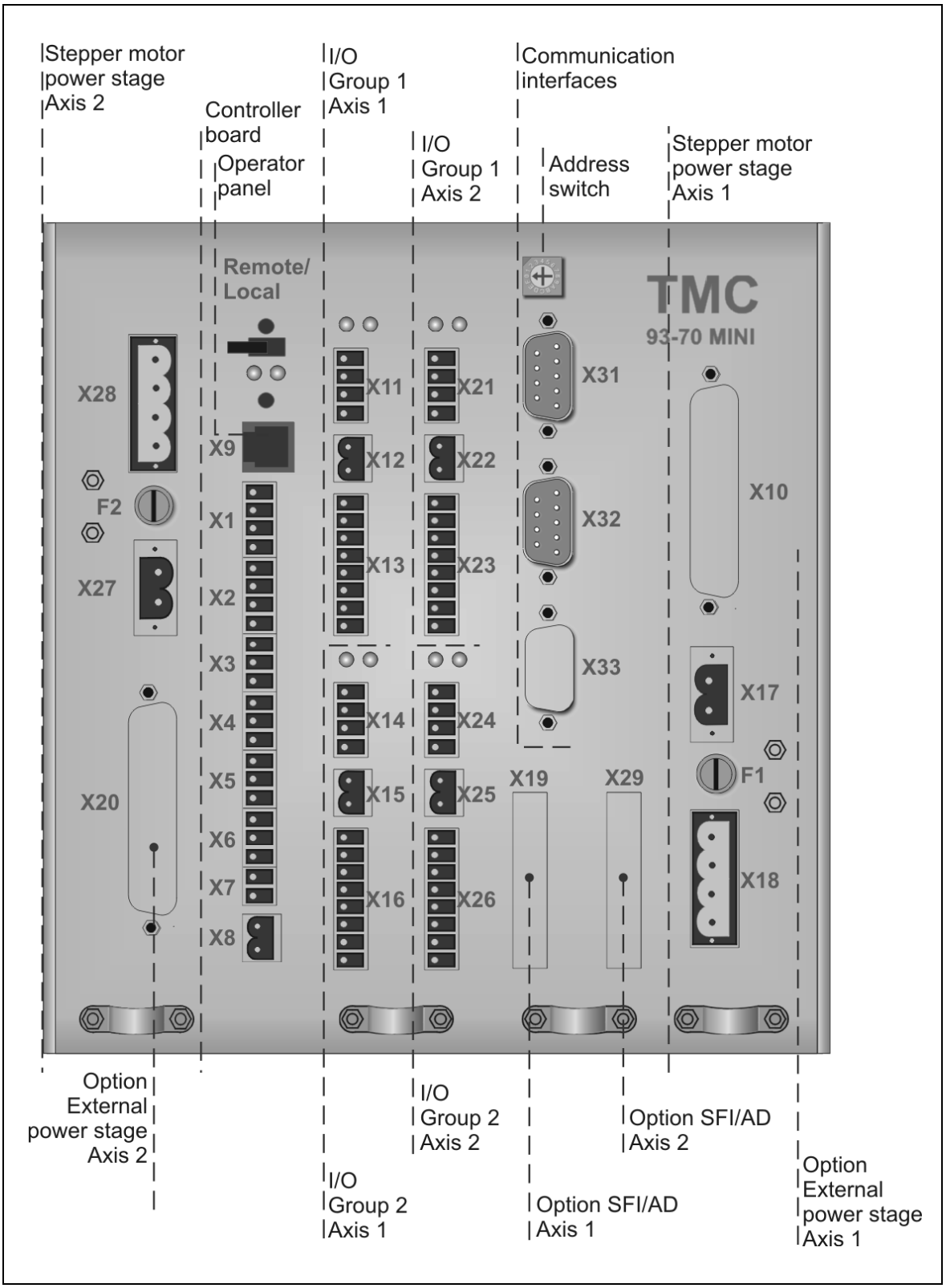


Fig. 2: Structure of a TMC controller

| OMC/TMC Screw Connectors | | | | | |
|---|---|---|---|---|---|
| | | X10 | External power stage axis 1 | X20 | External power stage axis 2 |
| X1 | Control pulse output | X11 | Outputs board 1, group 1 | X21 | Outputs board 2, group 1 |
| X2 | External control pulse input | X12 | 24 $V_{DC}$ Supply I/O board 1, group 1 | X22 | 24 $V_{DC}$ Supply I/O board 2, group 1 |
| X3 | Limit switch axis 1 + direction | X13 | Inputs board 1, group 1 | X23 | Inputs board 2, group 1 |
| X4 | Limit switch axis 1 – direction | X14 | Outputs board 1, group 2 | X24 | Outputs board 2, group 2 |
| X5 | Limit switch axis 2 + direction | X15 | 24 $V_{DC}$ Supply I/O board 1, group 2 | X25 | 24 $V_{DC}$ Supply I/O board 2, group 2 |
| X6 | Limit switch axis 2 – direction | X16 | Inputs board 1, group 2 | X26 | Inputs board 2, group 2 |
| X7 | Output basic position signal | X17 | Supply motor and power stage axis 1 | X27 | Supply motor and power stage axis 2 |
| X8 | 24 $V_{DC}$ Supply controller board/ limit switches. | X18 | Stepper motor axis 1 | X28 | Stepper motor axis 2 |
| X9 | Service interface operator panel | X19 | Option SFI/AD axis 1 | X29 | Option SFI/AD axis 2 |
| X31 | COM1 Interface | X32 | COM2 Interface | X33 | Out RS 485 |

Please mention for all connector figures in this manual:

When the controller is placed in such position that the designation OMC or TMC is at the right upper edge, the upper pin in the drawing is also the upper pin at the device.

Exception: X28 and X27 are shown 180° rotated in the figures 2 and 22.

## 1.2.1 The Controller Board

OMC and TMC are managed by their "intelligent motion controllers", the compact all-rounders. The motion controller downloads sequential programs from PC, stores the programs, interrogates inputs, sets outputs and evaluates two limit switch signals per axis, plus and minus direction. As well the motion controller sets the step resolution: full step, half step, 1/4, 1/5, 1/8, 1/10 up to 1/20 step, acceleration, deceleration and positioning of the stepper motor, using linear or s-shape ramps.

The 24 $V_{DC}$ controller supply voltage also supplies limit switches and encoders (OMC or TMC with optional SFI board).

## 1.2.2 The Stepper Motor Power Stage

**Internal stepper motor power stage**

For each axis, OMC and TMC contain a MOSFET power stage for bipolar stepper motor control. The power stages work with phytron's welltried technology, the enhanced field synchronized current shopped regulation, called 4-QE, four quadrants precision current control.

For smooth stepper motor movement, the power stages solve the motor full step into increments up to 1/20 step. Run current, stop current and acceleration ("Boost") current can be programmed independently from another, in the range from 0.14 to 9 $A_{PEAK}$ at 70 $V_{DC}$ nominal voltage.

Rectifiers and load capacitors in each power stage enable supply voltages from 24 to 70 $V_{DC}$ as well as 17 to 50 $V_{AC}$.

Remark:
The full motor current can only be reached with supply voltages above 30 $V_{AC}$ or 40 $V_{DC}$.

A simple mains transformer is enough for power stage supply. In order to fullfil the Low Voltage Directives, it must be built-up with double insulation between primary and secondary windings.

Short-circuit from phase to phase, phase to ground or phase to other phase will be recognized as well as overtemperature and the power stage will be automatically switched off. If the voltage drops due to a weak power supply and dynamical motor movements, the power stage recognizes low voltage error and will be also switched off.

**External stepper motor power stage (option)**

OMC/TMC also can be ordered without internal power stage(s). Instead of an internal power stage, a 25 pin D-sub connector is built-in to connect an external power stage. The controller TMC can also be delivered in versions for one internal and one external power stage.

**Important:** The external power stage should be compatible to the OMC/TMC controller (for example MSD MINI with 17 A / 140 V).

### 1.2.3 Interfaces

RS 232 is provided as standard communication interface for the OMC/TMC controllers.

Optionally, the controller can be equipped with the interface RS 485 to reach a fail-safe connection between the controllers in case of long cabling.
The following table shows how to use the connectors X31, X32 and X33 in the bus operating mode:

| | **OMC/TMC Interface board** | |
|---|---|---|
| **Connector** | **RS 232 (standard)** | **RS 485 Bus** |
| X31 | RS 232 (1) | RS 232 (1) |
| X32 | RS 232 (2) | IN RS 485 (2) |
| X33 | – | OUT RS 485 |

### 1.2.4 REMOTE/LOCAL Switch

Switching from REMOTE to LOCAL: The stored program is started.

### 1.2.5 Reset Push-Button

The Reset push-button above the REMOTE/LOCAL switch is mounted recessed in order to inhibit accidential operation.
Reset cancels possibly error messages.
Delay time after end of Reset signal: about 3 sec.

The button below the REMOTE/LOCAL switch is reserved for the service.

## 1.3 Operating Modes

### 1.3.1 REMOTE/LOCAL

You can select the controller's operating mode with the REMOTE/LOCAL switch:

**REMOTE** The controller is connected to the PC via interface.
In this operating mode, programs edited by the customer can be transmitted from PC to controller and back. In the REMOTE mode it is also possible to test single instructions or to test motor run using the MiniLog-Comm communication software.

**LOCAL** When switching to LOCAL the stored program will be started. The program should be stored in the auto run register.

a) The program runs without connection to the PC.

b) Program run with connection to an external computer
The PC can be called by the sequential program in order to exchange actual data.

## 1.3.2 Stand-alone / Master-Slave / Bus Operating Mode

Every OMC or TMC can be used in single or multi-axle operating mode:

**Stand-alone mode**

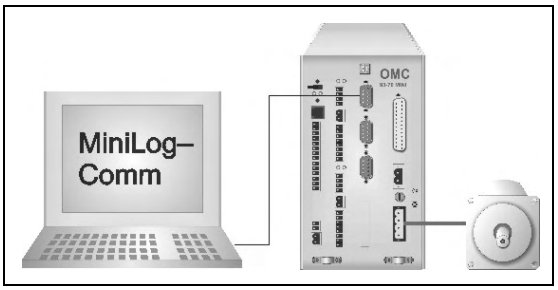


In the single device mode the address switch of the OMC/TMC controller can be set to the position 0...9 or A....F. The controller is connected to the PC via RS 232. Now programming and putting-into-service can be done.

The **multi-axle mode** is possible as master-slave or bus operating mode.

**Master-slave mode**

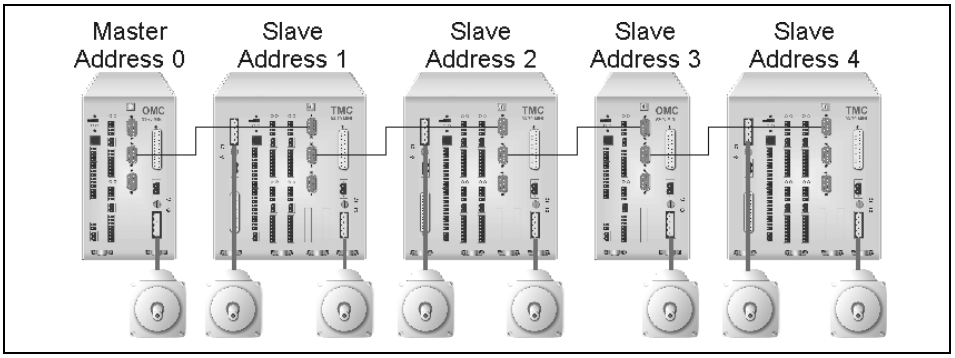


In the master-slave mode a controller is defined as master by the address 0. The address position 0 is blocked for all other controllers, the slave controllers. The PC can be connected to the master controller for programming via RS 232. As well via RS 232 an Ethernet adaptor (COM server) can be connected for remote diagnostics and maintenance. The commands are transmitted from the PC to the master, then to the first slave and eventually to more slave controllers via RS 232.

Status information, input states, error messages and so on are also transmitted from controller to controller in the opposite direction.

All inputs and outputs in master and slave devices can be used independently on axis.

**Bus mode**

In bus mode up to 30 axes can come into action at the same time by one PC via RS 232 or a immune to interfering RS 485 connection (bus connection, 4-wire operation).
In this operating mode all controllers work independently. Every OMC/TMC is set to another address.

## 1.3.3 Address Switch

A controller with address 0 is defined as master in **master-slave mode**. The first slave device must be addressed by “1”, the second by ‘2’ and so on. In master-slave mode you can drive 8 axes, combining one and two axes devices as required. The signals are sent to the master by PC and are transmitted then to the slaves via RS 232.

In **stand-alone mode**, the address 0 must not be used. You can drive up to 15 devices or 30 axes dependent on the number and type of the controllers at the same time with the addresses 1 to 9 and A to F.

| | **Master-slave mode** [1] | | **Stand-alone mode**[1] | |
|---|---|---|---|---|
| **Address switch** | **OMC controller**[2] | **TMC controller**[2] | **OMC controller**[2] | **TMC controller**[2] |
| 0 | MASTER axis 1 | MASTER axis 1/2 | not allowed[3] | |
| 1 | SLAVE axis 2 | SLAVE axis 3/4 | axis 1 | axis 1/2 |
| 2 | SLAVE axis 3 | SLAVE axis 5/6 | axis 2 | axis 3/4 |
| 3 | SLAVE axis 4 | SLAVE axis 7/8 | axis 3 | axis 5/6 |
| 4 | SLAVE axis 5 | not allowed | axis 4 | axis 7/8 |
| 5 | SLAVE axis 6 | | axis 5 | axis 9/10 |
| 6 | SLAVE axis 7 | | axis 6 | axis 11/12 |
| 7 | SLAVE axis 8 | | axis 7 | axis 13/14 |
| 8 | not allowed | | axis 8 | axis 15/16 |
| 9 | | | axis 9 | axis 17/18 |
| A | | | axis 10 | axis 19/20 |
| B | | | axis 11 | axis 21/22 |
| C | | | axis 12 | axis 23/24 |
| D | | | axis 13 | axis 25/26 |
| E | | | axis 14 | axis 27/28 |
| F | | | axis 15 | axis 29/30 |

[1] This mode is applied to all interface boards: RS 232, RS 485 or RS 422
[2] One and two axes devices can be combined as required.
[3] The ‚0‘ address 0 isn’t allowed in bus mode, but only allowed in stand-alone mode.

## 1.4 Options

| | | |
|---|---|---|
| **Interfaces:** | RS 232 ist Standard, Option: RS 485 | |
| **Mounting kits:** | Rail mounting clip or wall mounting bracket | |
| **SFI board:** | Step failure monitoring for stepper motors with incremental encoder or absolute encoder (SSI interface). | For each axis one slot is available for additional boards:<br>Example: SFI1/AD2-→<br>axis 1: SFI board<br>axis 2: AD converter board |
| **AD converter board:** | 14 bit AD converter board for using e.g. a joystick | |
| **Cooling:** | For each axis a 24 V fan for the power stage can be mounted at the housing's bottom plate. | |
| **Accessories** | USB-RS 485 converter | |

### 1.4.1 Option SFI

Two encoder types can be connected to OMC/TMC controllers: incremental encoders or absolute encoders acc. to the SSI standard.

For each axis an optional step failure indication board (SFI) can be mounted. The controller board provides 5 $V_{DC}$/max. 150 mA supply for the encoder.

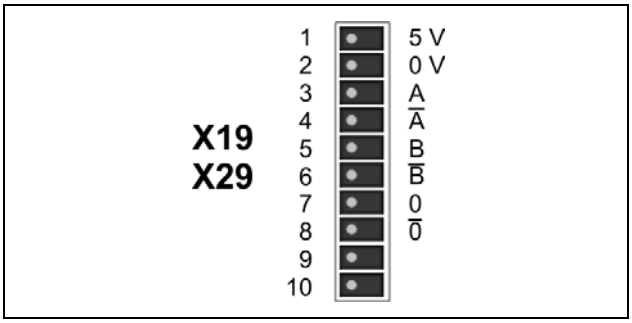


Fig. 3: Incremental encoder connection

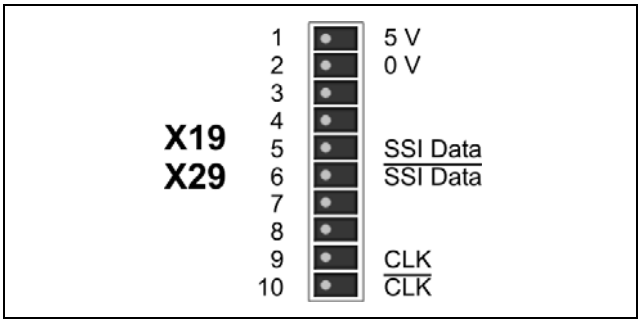


Fig. 4: SSI encoder connection

**Remarks:**

1. When using encoders, the parameters P34 to P39 should be checked and adapted (MiniLog-Comm):

   P34 no encoder / incremental encoder / absolute encoder
   P35 encoder resolution
   P36 encoder function: counter / step failure indication
   P37 tolerance value for step failure indication
   P38 preferential encoder direction of rotation
   P39 conversion factor (one increment corresponds to ...)

2. Use shielded cables, twisted pairwise, for encoder connection. The transmission mode includes no protection against faulty transmission values.

3. For each axis **one** slot is available for additional boards: SFI **or** AD

## 1.4.2 Option 14-Bit AD Converter

- 14-Bit AD converter board with voltage ( ± 12 V / 0...+12 V) or current input (4...20 mA), typically used e.g. for a joystick.
- Connection to X19 (OMC) ): 4 inputs
  to X19/X29 (TMC): 2x4 inputs

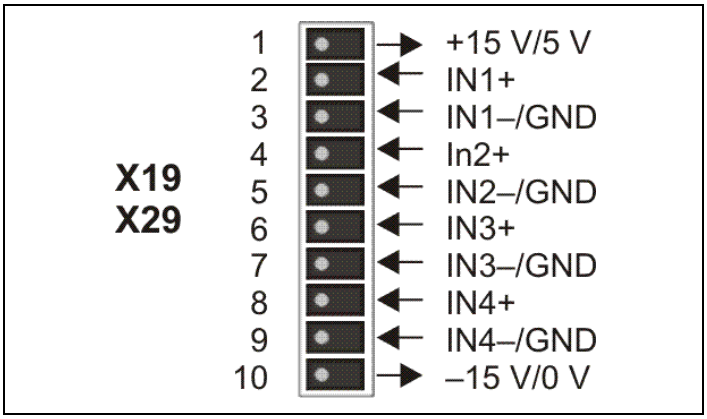


Fig. 5: X19/X29 pin assignment

- Resolution: 14 bit, digital values between 0 and 16384 incl. sign
- Analog-to-digital AD converter: 6 µs
  MiniLog program: 1 ms

**Versions:**

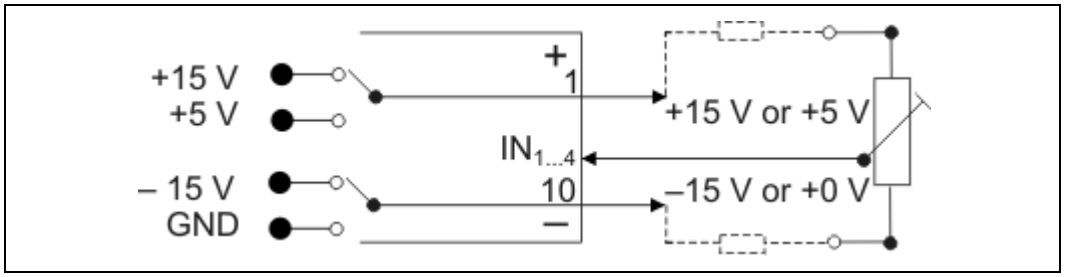


Fig. 6: AD converter versions

➢ by differentiation of the voltage output (pin 1/10):
  a) –15 V .. +15 V
  b) 0 V .. +15 V
  c) 0 V .. +5 V

➢ By differentiation of the input wiring circuit:

**1) Unipolar input (standard)**
2) Differential input

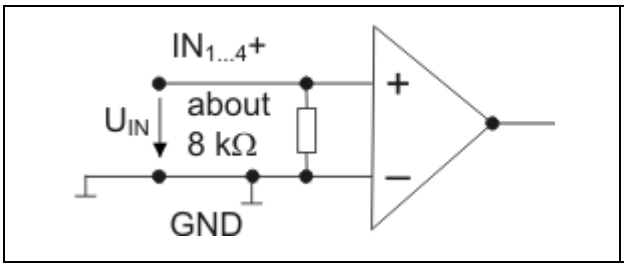


Fig. 7: Unipolar input **(standard)**

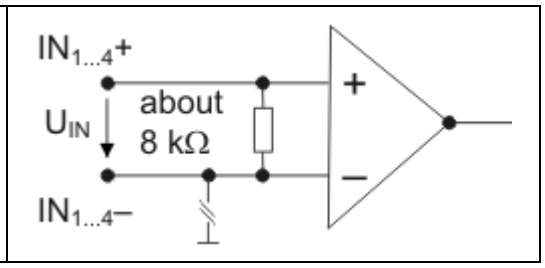


Fig. 8: Differential input

➢ By input wiring: 20 mA current loop

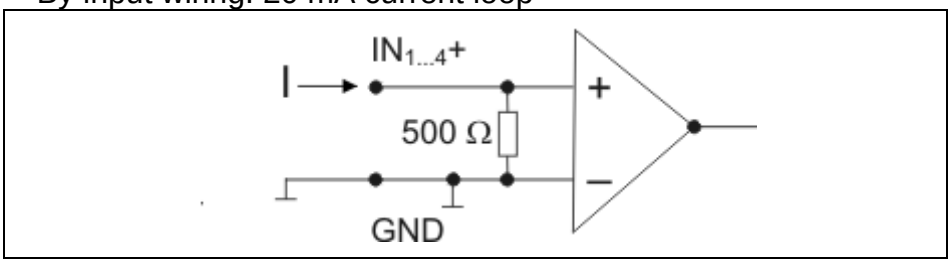


Fig. 9: Input as 20 mA current loop, output 0 V to 15 V

**Important:** Please check the type of AD converter board in your OMC/TMC (voltage values!) before putting-into-service. The board configuration has to be set in factory.

**Remark:** 0 V of the A/D converter board and OMC/TMC (connector X8) have a common potential.

The output voltage ±15 V is axactly the same as the internal supply voltage for the AD converter. The testing range is max. ±12 V.

For processing the AD converter results refer to the pages 9, 28 and 53 of the programming manual MiniLog for OMC and TMC.

Also refer to the programming example on page 51.

For each axis **one** slot is available for additional boards: SFI **or** AD!

# 2 To Consider Before Installation

Read this manual very carefully before installing and operating the OMC/TMC. Observe the safety instructions in the following chapter!

## 2.1 Qualified Personnel

Design, installation and operation of systems using the OMC/TMC may only be performed by qualified and trained personnel.

These persons should be able to recognize and handle risks emerging from electrical, mechanical or electronic system parts.

***WARNING !***

Without proper training and qualifications damages to devices and injury might result!

## 2.2 Safety Instructions

The OMC/TMC must only be operated in accordance with the protective measures in chap. 3.

n case of motor voltages > 24 V:
The controller must only be operated if this unit and the motor housing both are connected to protective ground.

Motor cables and motor supply cables should be fixed to the device by the cable clamps at the front side.

Up to 3 minutes after turning off the supply voltage, dangerous voltages may still exist within the device.

**Be careful handling the screw connectors X18/X28 at the controller as well as with any motor cable coupling.**
As long as the power stage is connected to supply voltage, a hazardous voltage level is present at these components, even if the motor is not wired. Up to 3 minutes after turning off the supply voltage, dangerous voltages may still exist at the connectors. Danger of electric shock.

Always switch off the supply voltage if you connect or disconnect any wires or connectors at the controller. Most important:
**Do not unplug any connector when powered!**
Danger of electric arcing.

To avoid dangerous touch voltages all voltages should be safely separated from mains. The maximum voltage limits are the specified values of the corresponding chapters.

The surface of the OMC/TMC may reach temperatures of more than 70 °C. Danger of injury if touching the surface!

## 3 Protective Measure Options

The control unit must be operated by the protective measure PELV acc. to VDE 0100. Board and motor housing have to be grounded and/or connected to 0 V.

Various options are possible to achieve the protective measure PELV:

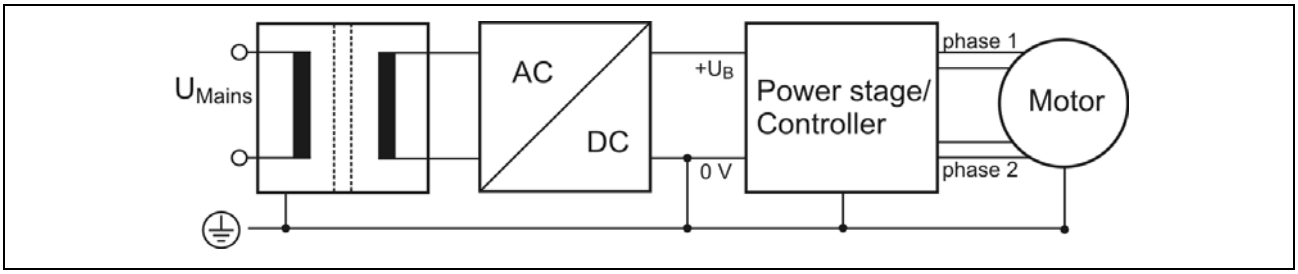


Fig. 10: PELV – Grounding: total

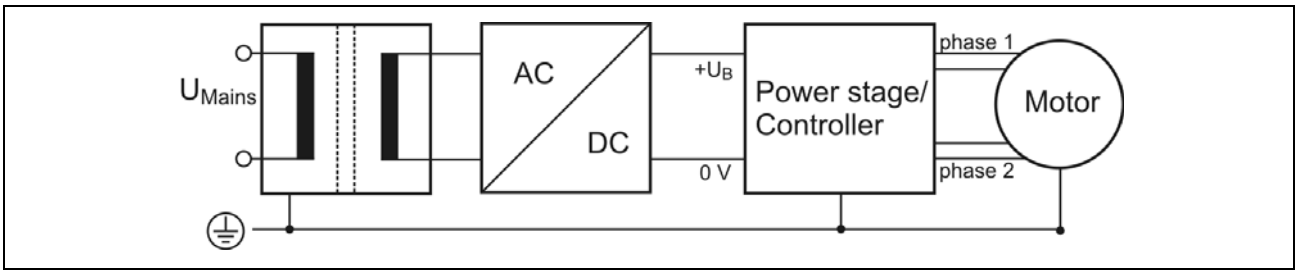


Fig. 11: PELV – Grounding: Power Stage and Motor.
The secondary winding of the transformer (SELV supply) must not be grounded because the equipment is grounded.

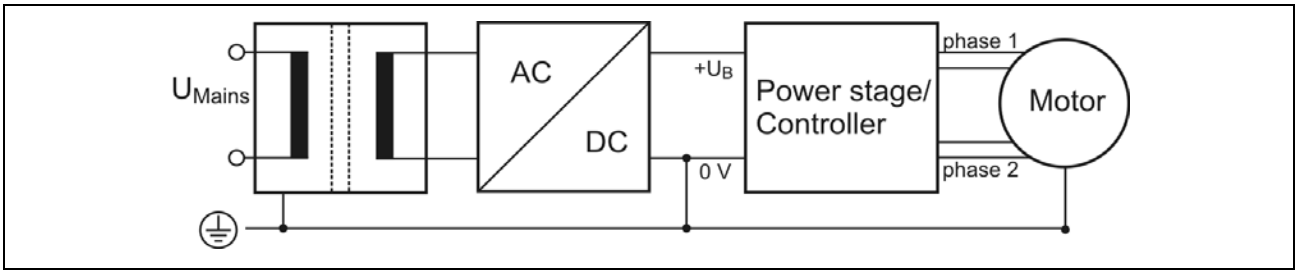


Fig. 12: PELV – Grounding: 0 V and Motor

If there is no PE clamp on the motor, the 0 V wire **must** be grounded to complete the protective measure PELV (Fig. 13/14):

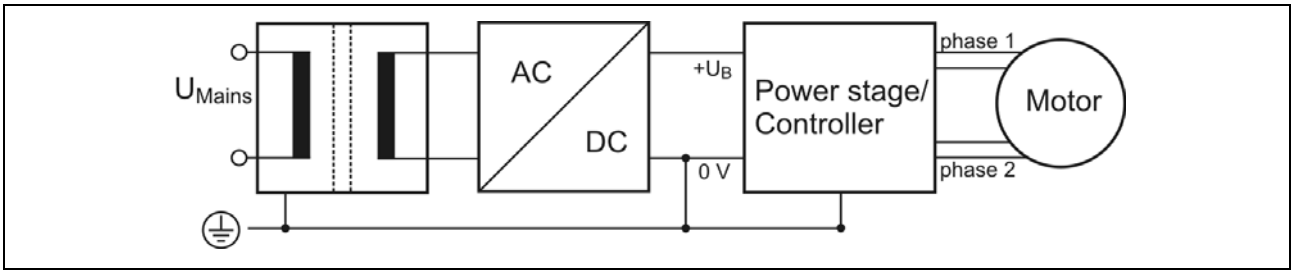


Fig. 13: PELV – Grounding: 0 V and Controller

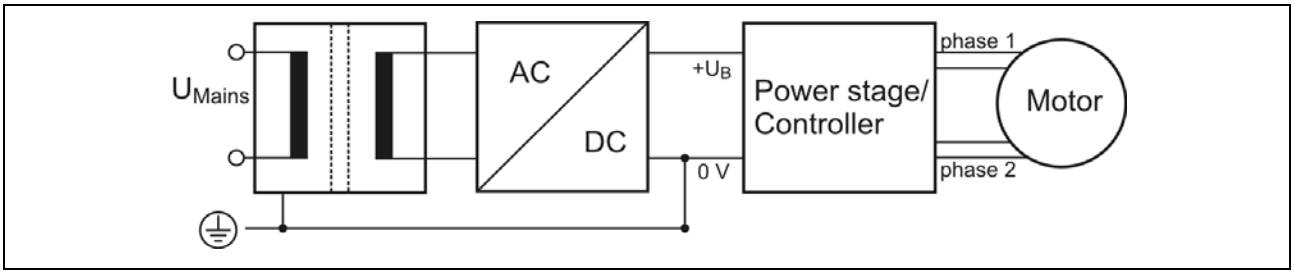


Fig. 14: PELV – Grounding: 0 V

Protective measure PELV for application of the $+U_B$ should not exceed 70 $V_{DC}$ or 50 $V_{AC}$ at dry environment (environmental conditions 3 acc. to IEC 61201).

The supply transformer must be constructed with reinforced or double insulation between supply and secondary winding (acc. to EN 61558).

Only use motors which are checked acc. to EN 60034-1 (500 $V_{AC}$/1 minute).

# 4 Mechanical Installation

## 4.1 Mounting in a Switching Cabinet

OMC and TMC are designed for mounting inside a switching cabinet. Other environments can also be permissible dependent on supply voltages and applicable standards.

## 4.2 Rail or Wall Mounting

- The controller should be vertically mounted.
- Mount the controller to a plane surface with appropriate load capacity.
- Weight: OMC 1.5 kg
  TMC 2.4 kg
- Use the mounting kit for rail or wall mounting delivered with the controller. You may also use the mounting threads in the device's rear panel for individual mounting solutions.
- The mounting screws must intrude not more than 3 mm into the device's inner parts.
- Minimum free space above and below the controller: 100 mm
- Keep the air slots free to allow convective air exchange.
- Minimum free space to other devices besides the controller: 30 mm
- Recommended free space before the controller for connectors and cables: about 30 mm
- The controller has to be mounted and operated at a place free of shocks and vibrations.

<u>How to fasten the rail mounting clip</u>

Screw down the clip to the device's rear panel.

<u>How to fasten the wall mounting bracket</u>

1. Hang on the mounting bracket at the vertical slots.
2. Fasten the mounting bracket by both screws

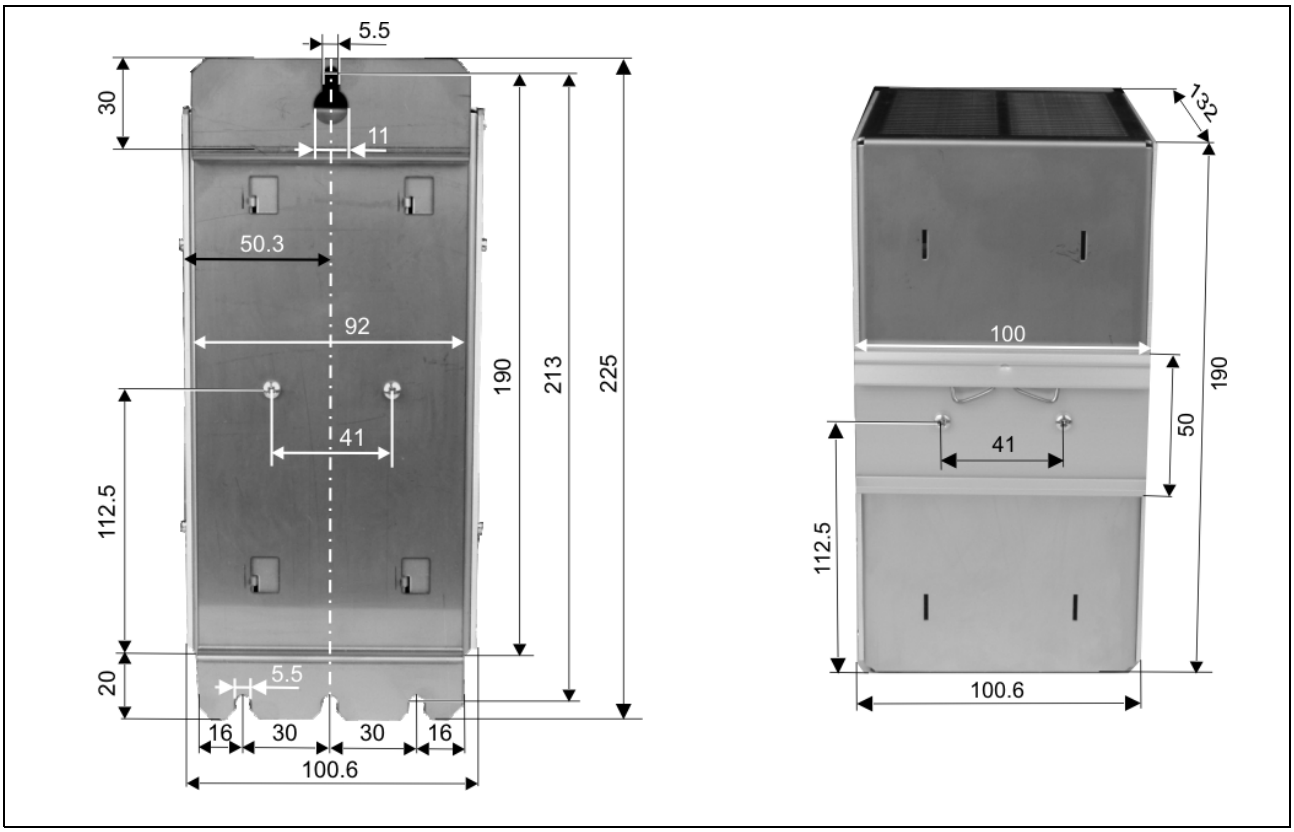


Fig. 15: OMC: Wall and rail mounting, dimensions

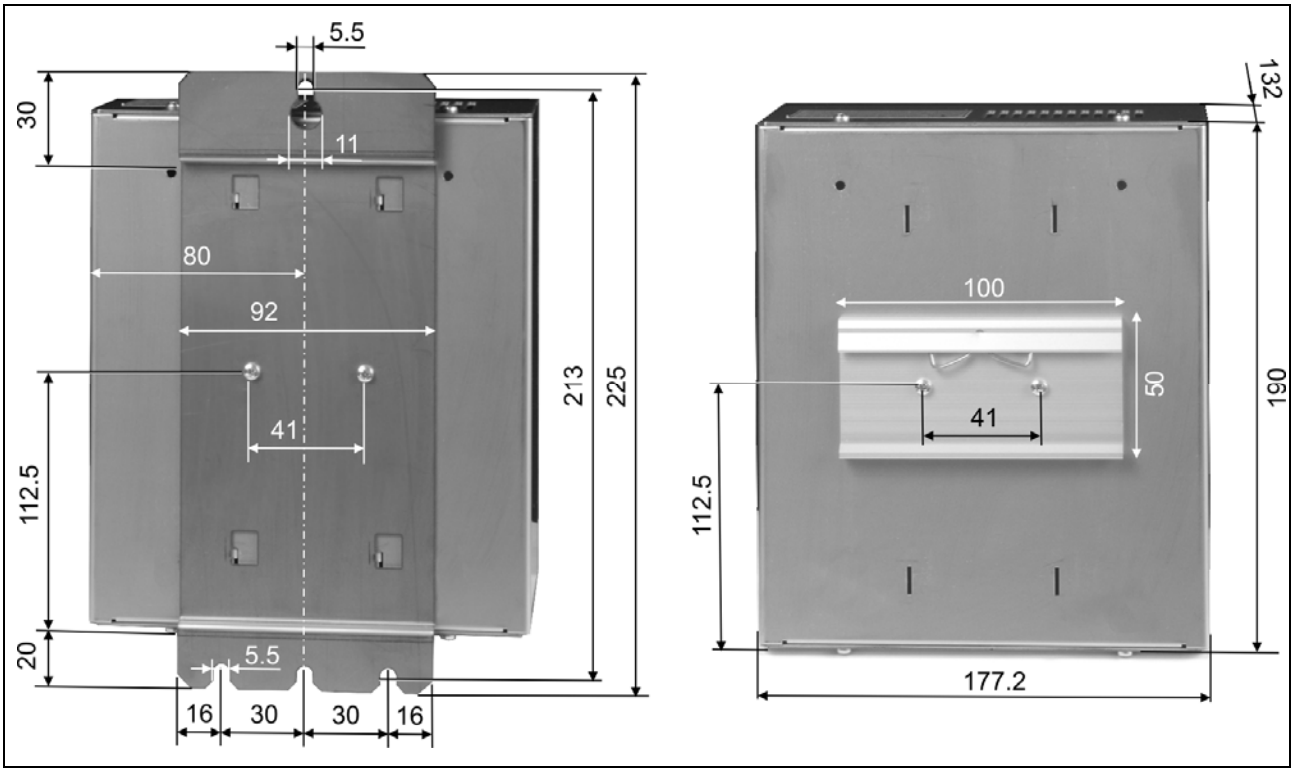


Fig. 16: TMC: Wall and rail mounting, dimensions

## 4.3 Ventilation

As described in the chapter 4.2, the controller's mounting should allow air circulation by the air slots. Cooling is not necessary in most cases under normal operating conditions.
In case of high ambient temperature (up to 50 °C permissible) and heavy duty cycle, one fan for each power stage should be mounted:

Type Papst 614
Air flow 40 m³/h
External supply 24 $V_{DC}$

- Thread holes for mounting a fan are provided at the bottom plate of the housing below each power stage.
- Mount the fan with four type M3 * 6 cylinder head screws.
- If you want to insert the screws into the holes of the fan's front and back panel, use four type M3 * 30 cylinder head screws.
- The preferred air flow direction is from bottom to top through the device. Observe the arrows on the fan's housing!
- The effectivity of the fans can be improved by removing the housing's air slot segments under the fans. Cut the small metal bridges carefully.

**<u>Be careful</u> when mounting the fans:**

**Metal particles must not get into the controller's housing!**

**Mounting screws must not intrude more than 3 mm into the controller's housing!**

# 5 Electrical Installation

## 5.1 Wiring Power Stage(s)

### 5.1.1 Internal Power Stage

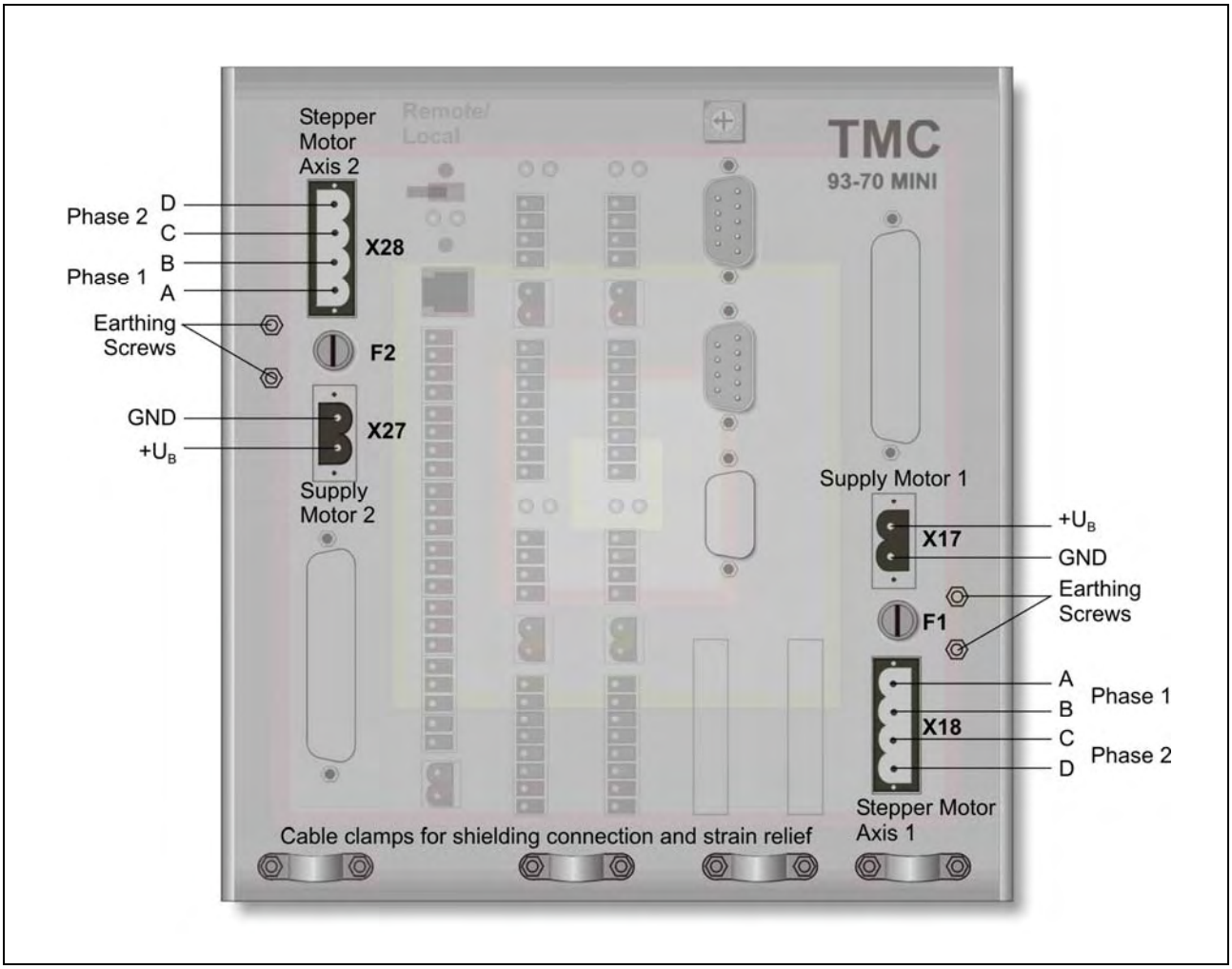


Fig. 17: Wiring stepper motor and motor supply voltage

| | |
|---|---|
| OMC<br>Single-axis controller: | One AC or DC supply voltage for power stage and stepper motor. |
| TMC<br>Two-axes controller: | Per each axis you need an AC or DC supply voltage for power stages and stepper motors. |

## 5.1.2 External Power Stage

It is possible to connect external power stages for more powerful stepper motors: for example MSD MINI with 17 A / 140 V.

Other power stages can be connected, if they are compatible to the controller.

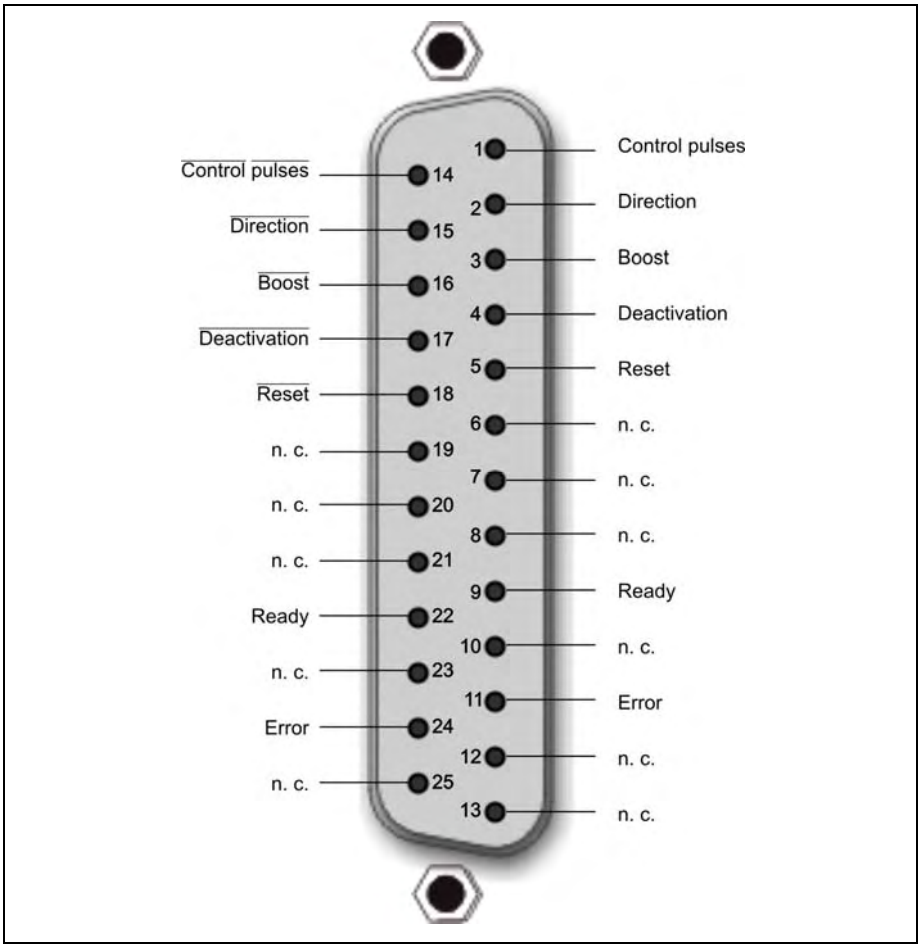


Fig. 18: X10 or X20 pin assignment

**Important:** If a 25 pin connector for external power stage supply is built-in, the device contains no internal power stage for this axis (option external power stage - without internal power stage).

## 5.2 Stepper Motor

Suitable stepper motor types for operation with OMC/TMC:

- Two-phase stepper motors with 4, 6 or 8 lead wiring scheme and up to 9 $A_{Peak}$ phase current
- Winding resistance lower than 10 Ohm
- Winding inductivity of a motor phase 0.5 to 10 mH
- To ensure electromagnetic compatibility (EMC), all parts of the motor housing should be conductively connected with each other.

The figure below shows the connection of a two-phase stepper motor with 4-lead wiring scheme and parallel connected windings:

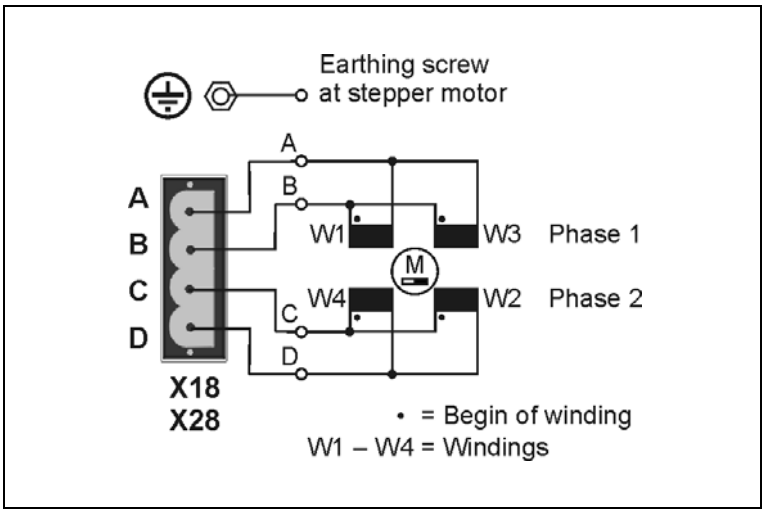

Do not plug in or plug out motor cable leads when the motor supply is powered on!

Danger of electric arcing!

Fig. 19: EMC compliant motor cable wiring at X18 or X28

Remark: Connector X28 position: 180° rotated, see fig. 17.

Other wiring modes are possible depending on application and stepper motor design. See next chapter.

Attention:

- Before running the motor, the motor currents should be set to suitable values! See chap. 6, Putting into service.
- 5-phase stepper motors **must not** be operated with OMC or TMC controllers. **The power stage might be damaged!**

## 5.2.1 Wiring Schemes

Motor leads not used should be individually isolated (e.g. 6-lead motors)!

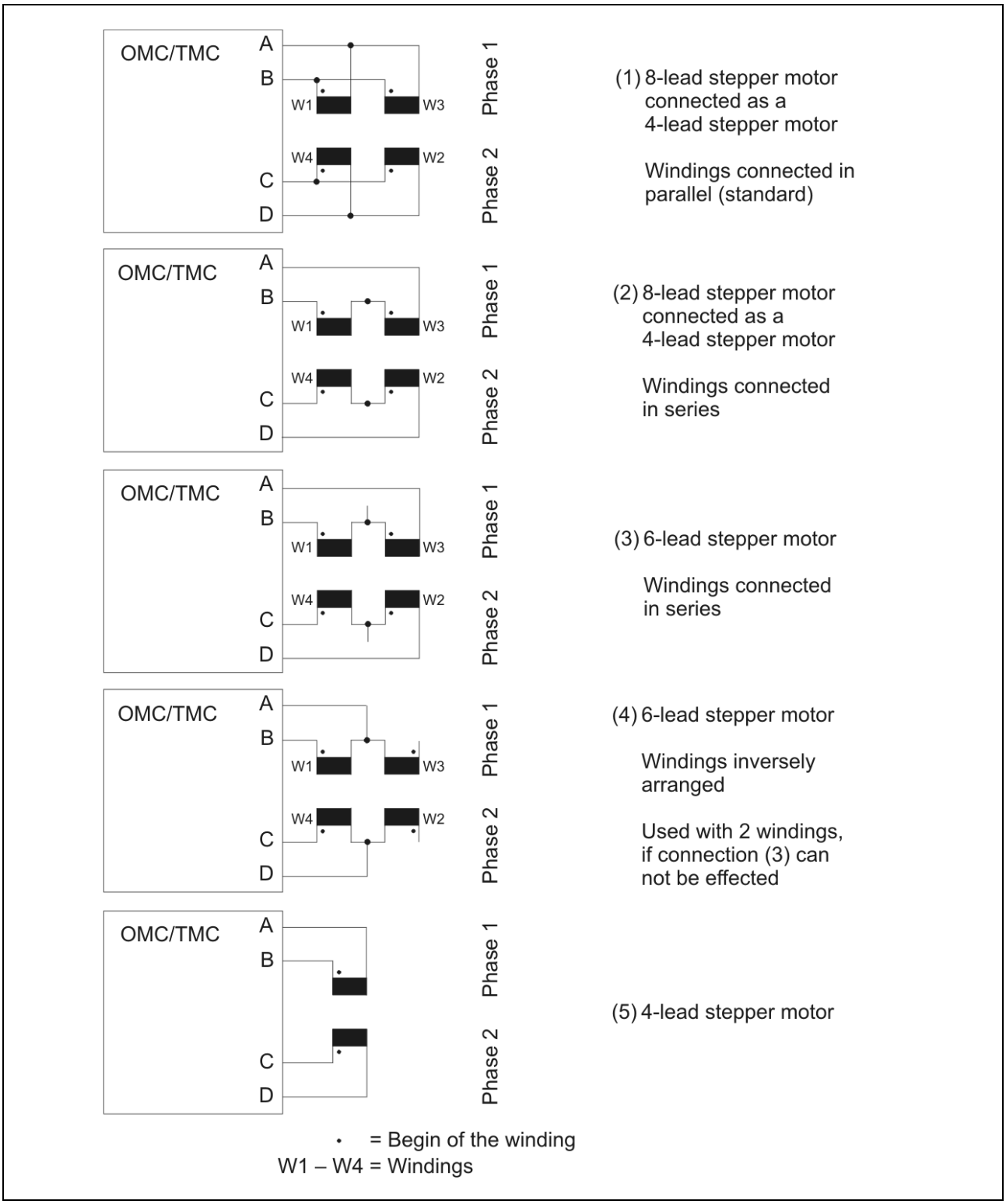


Fig. 20: Wiring schemes for 2-phase stepper motors

## 5.2.2 Motor Cable

Recommendations for Motor Cable Design:

| | |
|---|---|
| Cable type: | 5 pole with shielding mesh (for stepper motors without earthing screw: 4 pole with shielding mesh) |
| Lead cross section: | 1 mm² |
| Acceptable motor cable length: | dependent on the power stage current setting and motor winding resistance, see chap. 5.2.4. |

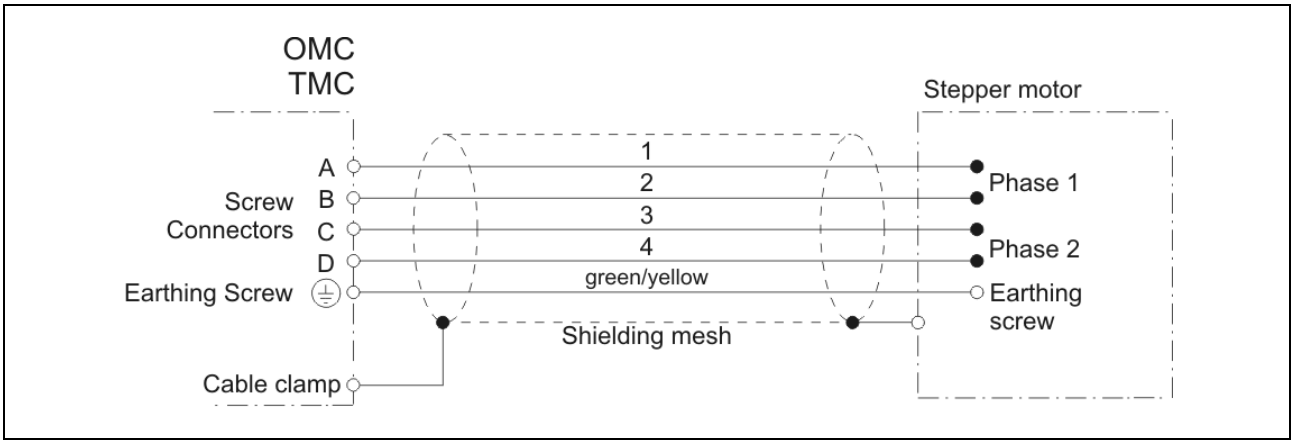


Fig. 21: EMC compliant motor cable wiring

Do not plug or unplug any connector when powered!

- The PE lead (green/yellow) of the motor cable should be fixed at the earthing screw near the OMC/TMC motor connector.
- The PE lead at the motor side of the cable should be fixed at the motor's earthing screw.
- For EMC compliant wiring it is important to conductively connect the motor cable shielding mesh with the controller housing. Use the cable clamps at the front side. Remove the external cable sheath at a length of 2 cm in that range of the cable where you fix it with one of the cable clamps.
- The cables connecting motor and controller should not be interrupted (e.g. by connectors).
- At the motor side the cable's shielding mesh should be connected to the motor housing at a large area. We recommend to use special EMC type conduit fittings. If a little motor has no conduit fitting you can fix the shielding mesh to metal parts of the machine near the motor flange.

### 5.2.3 Motor Supply Voltage

Each power stage contains rectifier and load capacitor to enable AC or DC supply for power stage and stepper motor. The requirements of the EMC Directives are met – even without installing supplementary filters.

A simple mains transformer is enough for power supply. In order to meet the Low Voltage Directives it has to be built-up with double insulation between primary and secondary windings.

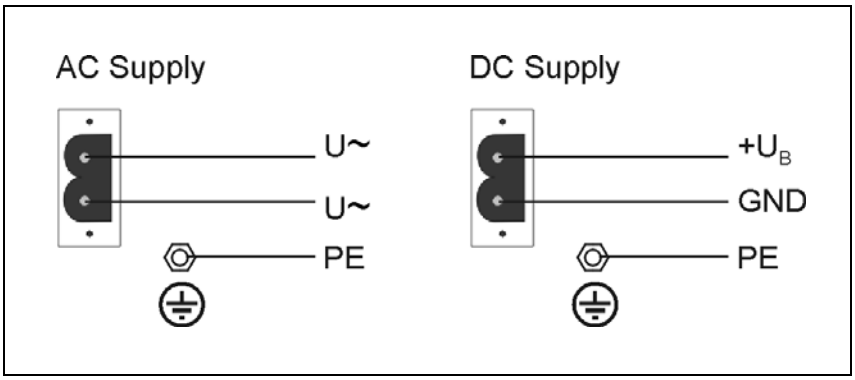


Permissible supply voltage ranges:

AC: 17 to 50 $V_{AC}$

DC: 24 to 70 $V_{DC}$

Fig. 22: Motor supply voltage connection at X17 resp. X27

Remark: X27 connector position: 180° rotated, see fig. 2.

- Protective ground of the supply voltage should be connected to the earthing screw near the connector „Supply“ (X17/X27).
- The cable should be fixed with one of the cable clamps for strain relief.

Do not plug in or plug out any screw connector when the supply voltage is on!

F1/F2 fuses:
The motor supply voltage is protected against short circuit by the 6.3 A slow fuse.

Remark:
The maximum motor current is available if the supply voltage is above 30 $V_{AC}$ or 40 $V_{DC}$.

## 5.2.4 DC

A DC supply voltage according to the specifications below can be wired at the X17 and X27screw connectors.

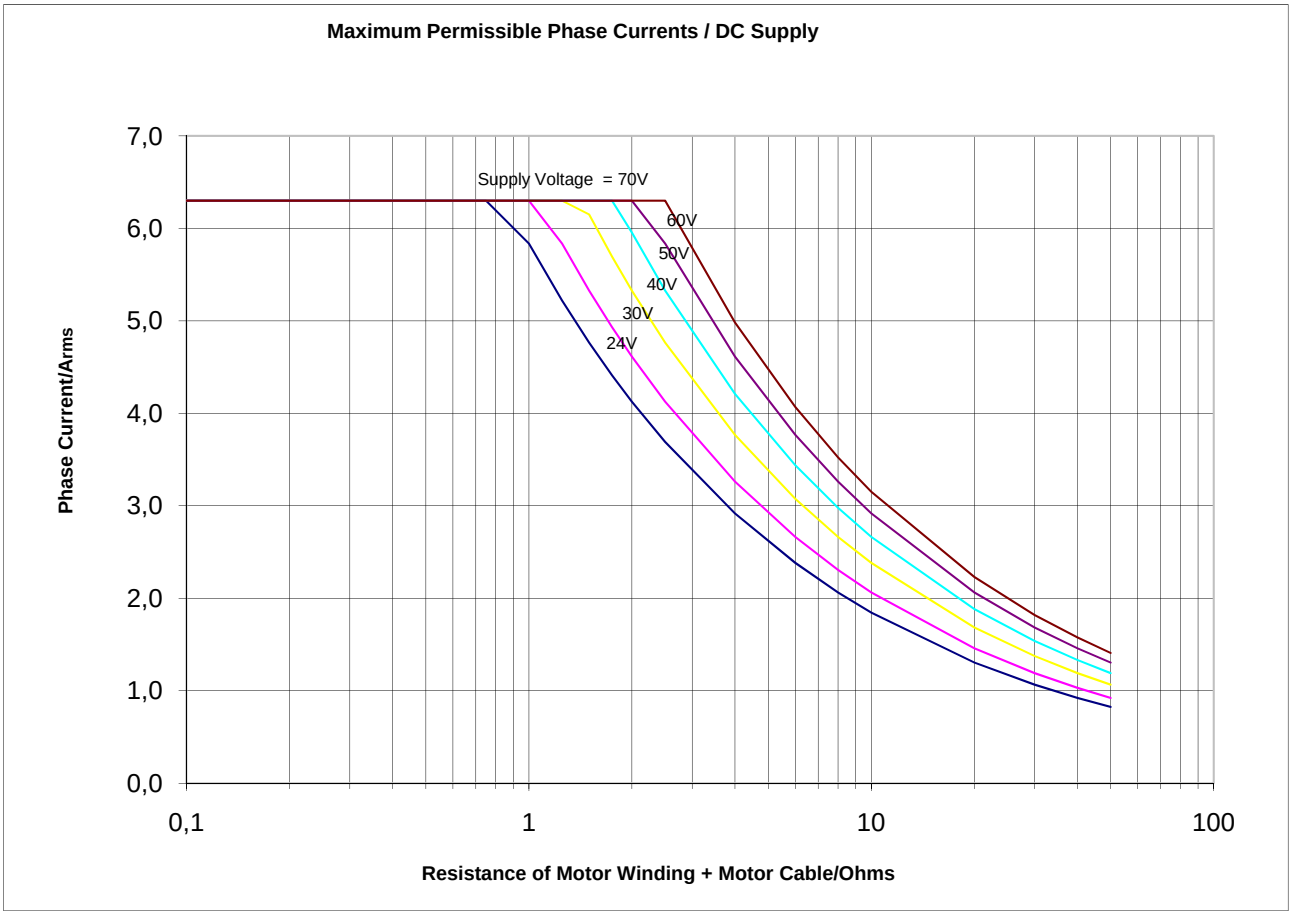


Fig. 23: DC supply

Acceptable supply voltage range with smoothed DC supply: 24 $V_{DC}$ to 70 $V_{DC}$.

The supply voltage must not drop under 17 Volts, not even for a very short period (> 1 ms). Otherwise the controller ecognizes a low voltage fault and switches off.

**Power supply design considerations**: The following formula allows to estimate the current required, if the power stage is supplied with smoothed DC current:

$$I_{Supply\ DC} = \frac{2.7 * R_{ges} * I_{ph}^{2}}{U_{Supply\ DC}} + 3.3A$$

with:

$I_{ph}$: Phase current set in MiniLog-Comm

$R_{ges}$: Total resistance of motor windings and motor cable of one phase.

$I_{supply\ DC}$: Supply current, effective value at DC supply

$U_{supply\ DC}$: Supply voltage, effective value at DC supply

Duty cycle = 100%

## 5.2.5 AC Supply

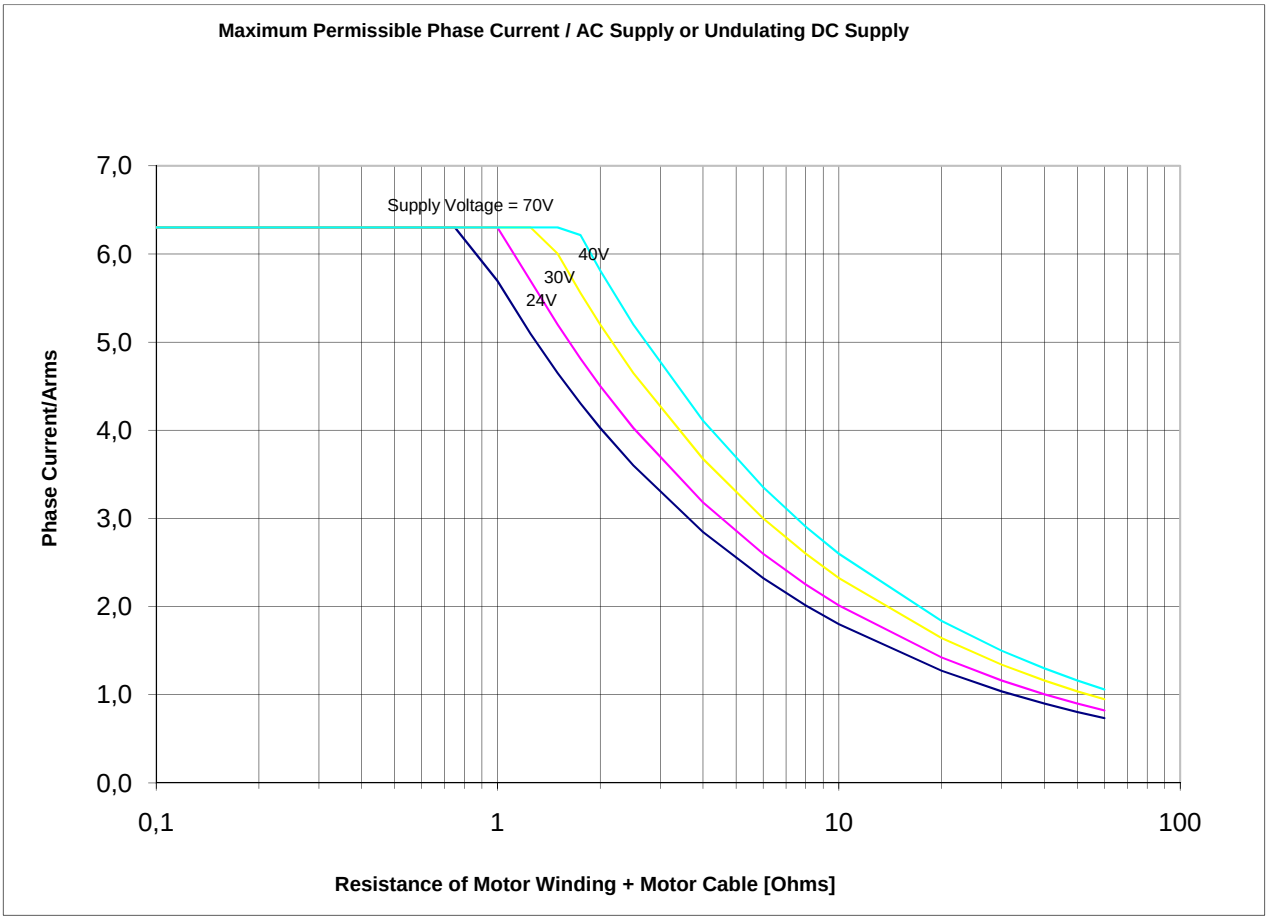


Fig. 24: AC supply

Acceptable AC supply voltage range: 17 $V_{AC}$ to 50 $V_{AC}$ (RMS value).

The peak voltage of the AC power supply must not be lower than 24 V (= 17 $V_{AC} * \sqrt{2}$), even with full load and voltage deviations of –10%.

**Power supply design considerations:** The following formula can be used to estimate the effective AC current required:

$$I_{Supply\ DC} = \frac{2.7 * R_{ges} * I_{ph}^{2}}{U_{Supply\ AC}} + 4.7A$$

with:

$I_{ph}$: Phase current set in MiniLog-Comm

$R_{ges}$: Total resistance of motor windings and motor cable of one phase

$I_{supply\ AC}$: Supply current, effective value at AC supply

$U_{supply\ AC}$: Supply voltage, effektive value at AC supply

Duty cycle = 100%

## 5.3 Wiring the Controller Board

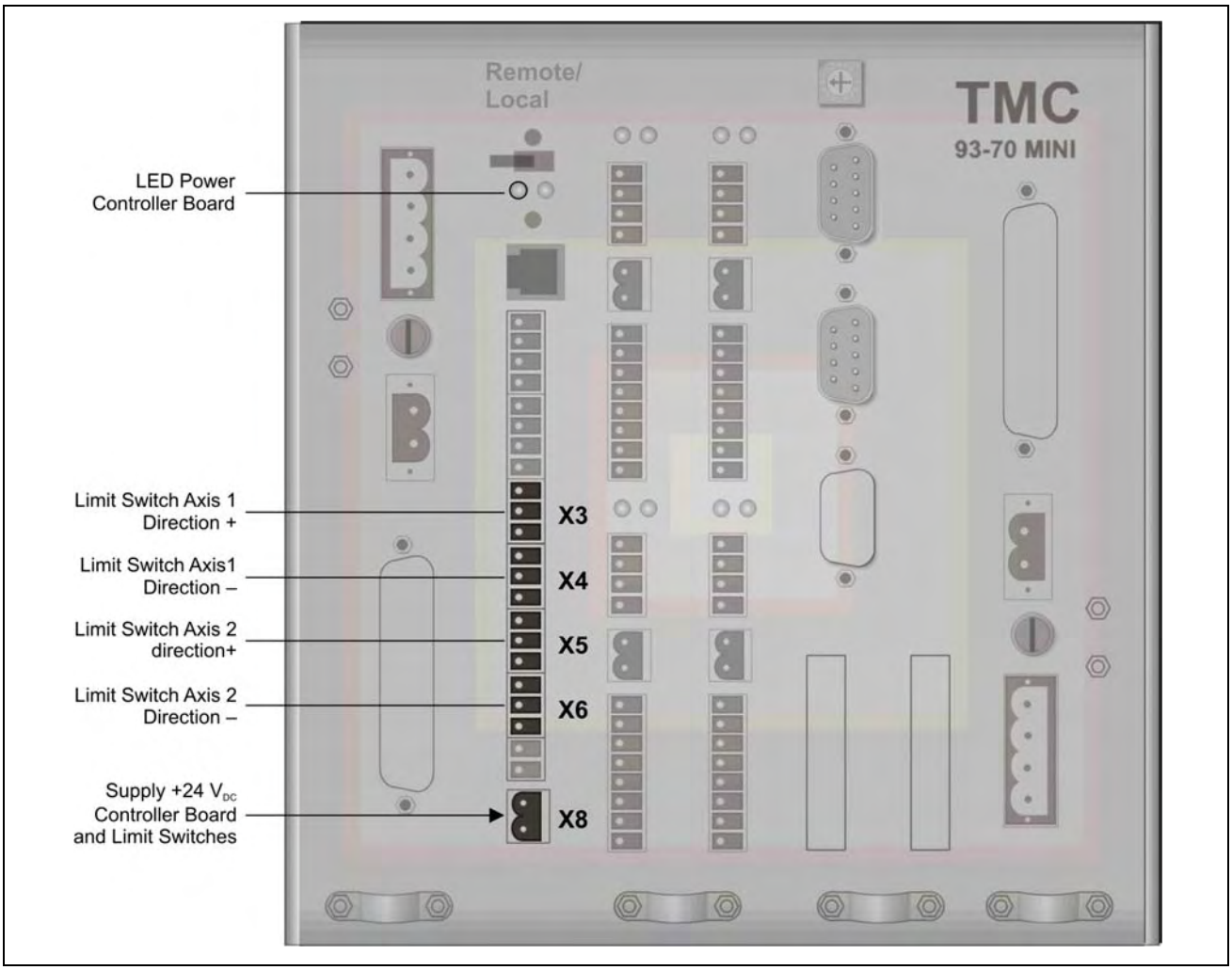


Fig. 25: Screw connectors for logic supply voltage and limit switches

### 5.3.1 Logic Supply Voltage

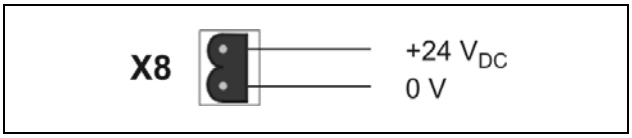

Do not plug in or out any connector when powered!

Fig. 26: Logic supply voltage wiring

The 24 $V_{DC}$ logic supply voltage will supply controller board and limit switches. Dependent on the number of limit switches (initiators) connected to the controller, up to 500 mA are required.

The left LED below the REMOTE/LOCAL switch lights if the logic supply voltage is on. The right LED lights if a system program is stored within the controller.

**Important:** The right LED **blinks** in case of a power stage error.

## 5.3.2 Limit Switches

The controllers are designed for connecting limit switches type PNP NCC. This type has the advantage that cable breaks can be recognized. Mechanical limit switches may be also connected.

| | | |
|---|---|---|
| **OMC** | 2 screw connectors for wiring limit switches | |
| | X3 | direction + |
| | X4 | direction – |
| **TMC** | 4 screw connectors for wiring limit switches | |
| | X3 | direction + of axis 1 |
| | X4 | direction – of axis 1 |
| | X5 | direction + of axis 2 |
| | X6 | direction – of axis 2 |

The limit switch supply voltage is generated by the logic supply voltage and is available at the X3 to X6 screw connectors.

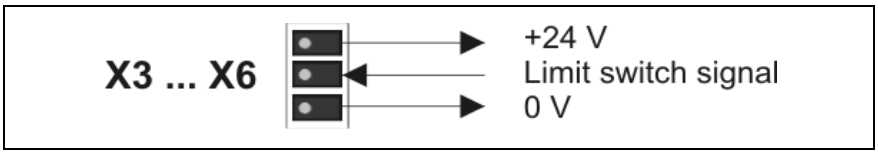


Fig. 27: Wiring a limit switch

The output voltage at the X3 to X6 connectors is on the same potential level with the logic supply voltage (X8 connector).

## 5.3.3 Control Pulses Output

External power stages can be connected at X1 screw connector. With their power stages working as slaves, also OMC or TMC controllers can be supplied with control signals from another OMC or TMC.

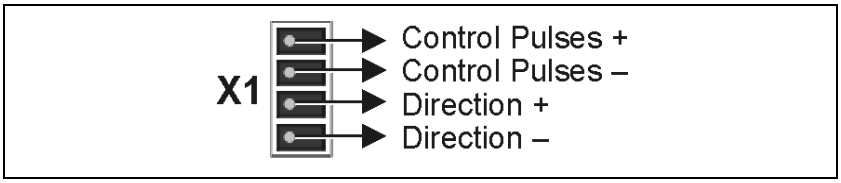


Fig. 28: Control pulses output

By means of control pulse output and input you can realize an "electric shaft"; that means several axes run with identical control pulses:

One controller initializes itself and its axes. Then, this controller is defined as master. The control pulse output is connected to the control pulse input "external control pulses" of the second controller. Now the second controller initializes itself and its axes. Next the second controller will be defined as slave, gets the external control pulse signal and transmits the signal to its power stage(s).

## 5.3.4 Control Pulses Input

External control pulse and direction signals (RS 422) can be fed in at X2 connector.
Signal level: 5 V
Required driver current: max. 10 mA at 3 V, max. 30 mA at 5.5 V.

The external control pulse signals will be coordinated to the axes by software (P44).

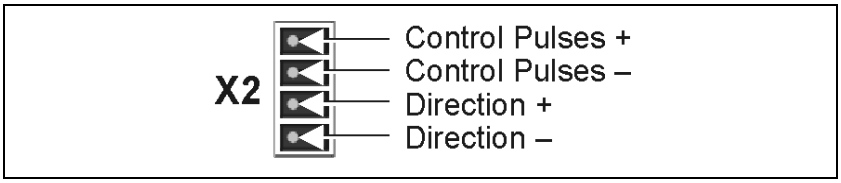


Fig. 29: Control pulses input

The **Control pulse signals** should fullfil the following specification:

Maximum control pulse frequency: 250 kHz
Impulse width: minimum 2 µs
The motor step will be executed with the falling edge of the control pulse signal.

For the **direction signals** please observe:

When the power stage's input optocoupler is powered, the motor turns against its preferential direction. The direction signal must not be changed at least 1 µs before the rising edge and after the falling edge of the control pulse signal.

It is recommended to activate control pulse inputs and direction inputs with push-pull drivers. This circuitry confers optimum suppression of disturbances.

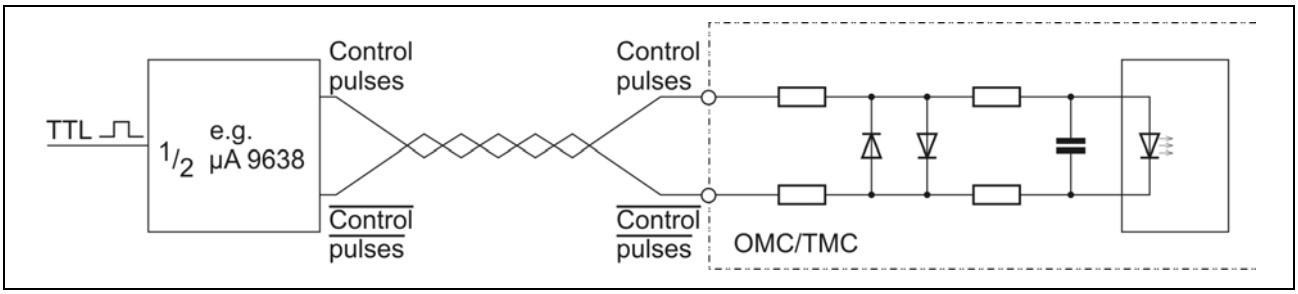


Fig. 30: Push-pull controlling

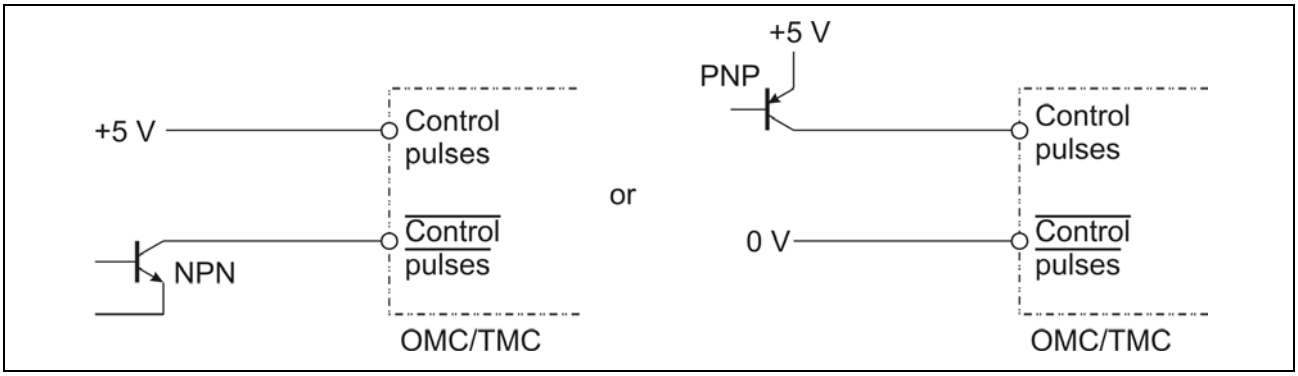


Fig. 31: Open collector controlling

## 5.3.5 Basic Position Signal

This signal is generated when the internal ring counter passes through zero. The signal is also generated after the unit is switched on and after RESET.

The signal is activated: every 4th step in the full step mode, every 8th step in the half step mode etc. In combination with a limit switch the basic position signal can be used to determine the machine's zero.

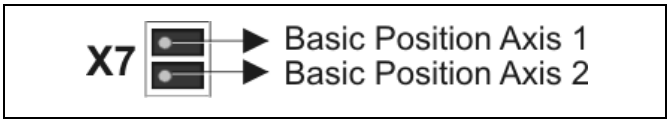


Fig. 32: Basic position signal output

Signal level: 24 V, referred to 0 V of X8

### 5.3.6 Service Interface

An operator panel can be connected to the OMC's or TMC's X9 service interface (Baud rate: 38400). Enabled functions can be used by the operator personnel without PC during the production: for example: selection of another program or change of the piece numbers, length, ...

The operator panel displays textual data or error messages on demand. The function keys on the operator panel are labeled individually and defined by the controller's programmer.

More functions can be added like input of drive instructions in the expert mode, setting of outputs or display of status messages.

In case of multi-axle mode the connected slaves are served and monitored by one operator panel on the master device.

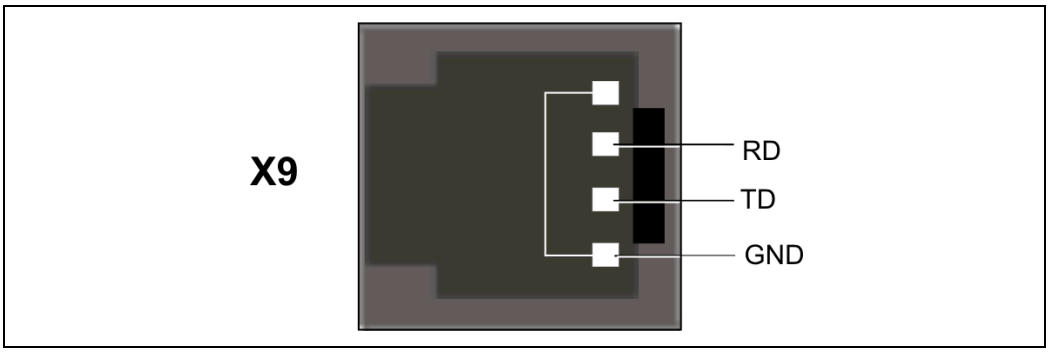


Fig. 33: Service interface 4 pole Western modular connector L flat oval 4p/4K

You'll find the description of the operator panel and the connection in phytron's manual 'BT 5 Operator Panel'.

## 5.4 Wiring the I/O Boards

In the OMC one I/O board is built-in while TMC contains two I/O boards. All inputs and outputs can be freely programmed, they are not allocated to a certain axis.

Each I/O board is equipped with two groups of I/Os (each 8 inputs and 4 outputs). Each I/O group has its own 24 $V_{DC}$ supply. The I/O groups are not internally connected with each other.

| | | | | | |
|---|---|---|---|---|---|
| OMC | One I/O board | | | | |
| | X11 | X14 | | | 2 x 4 digital outputs |
| | X13 | X16 | | | 2 x 8 digital outputs |
| TMC | Two I/O boards | | | | |
| | X11 | X14 | X21 | X24 | 4 x 4 digital outputs |
| | X13 | X16 | X23 | X26 | 4 x 8 digital outputs |

Remark: The inputs and outputs are individually isolated from the controller by optocouplers.

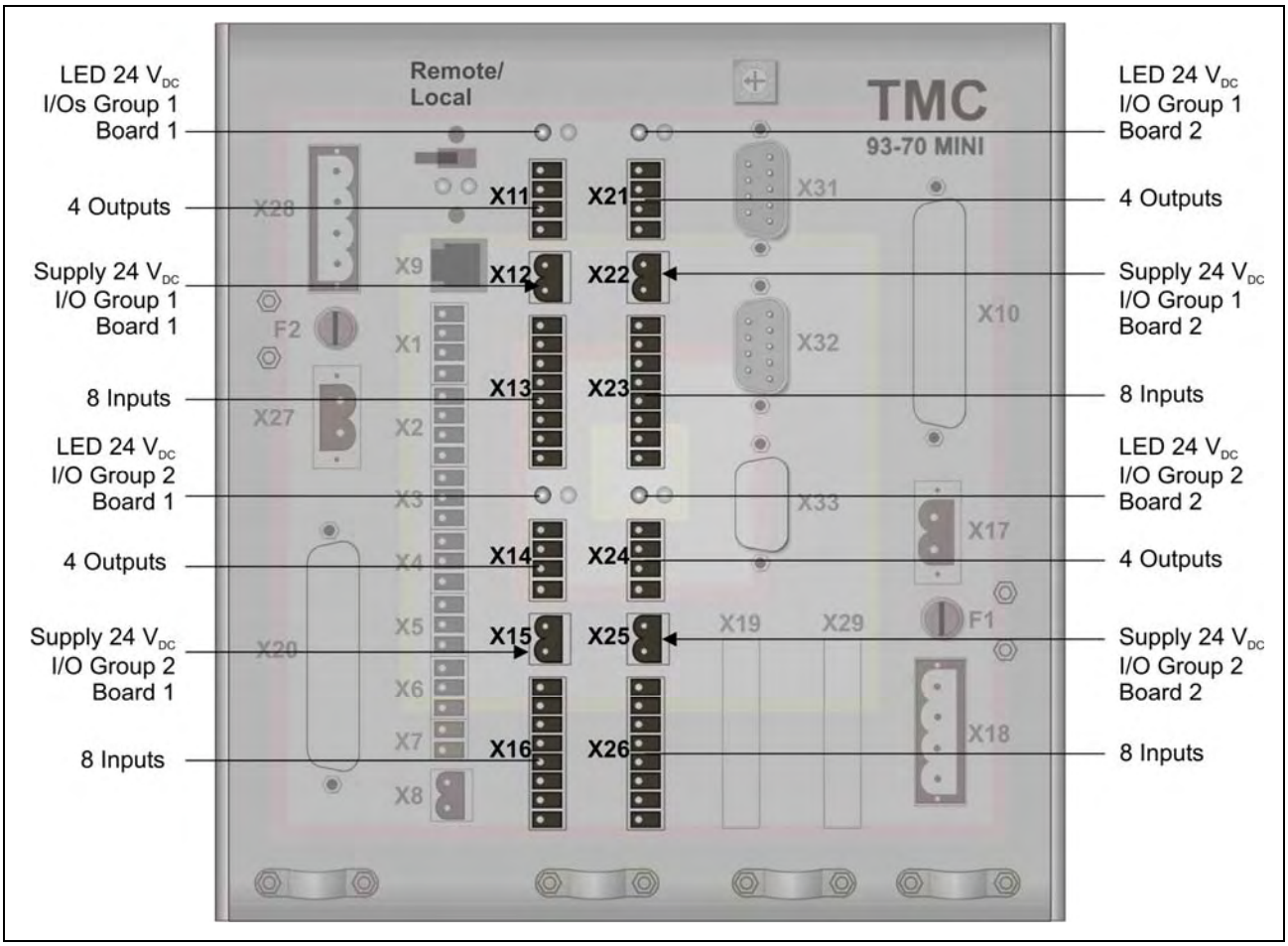


Fig. 34: Screw connectors for input and output wiring

## 5.4.1 I/O Supply

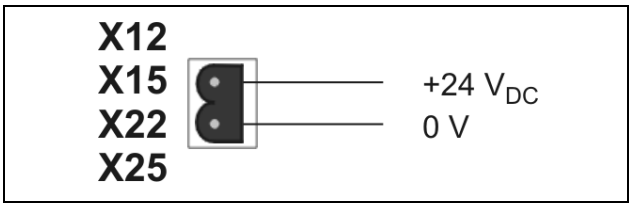


Fig. 35: I/O supply voltage connection

A separate +24 $V_{DC}$ (absolute limit values: 19.2 to 30 $V_{DC}$) supply voltage is required, max. 2 A per I/O group for each I/O group. When the supply voltage for an I/O group is on, both LED above the I/O connectors light.

## 5.4.2 Inputs

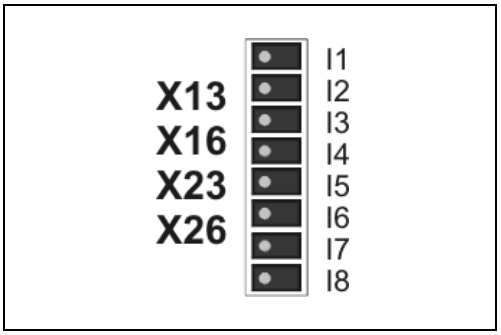


Fig. 36: Input connector

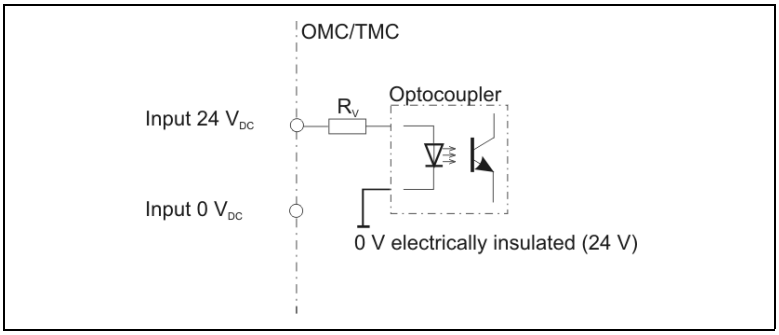


Fig. 37: Input circuit diagram

The inputs of each group are connected to a common ground.

Input level: 24 V

The input circuit protective resistor of 3.3 kΩ corresponds to 7 mA nominal driver current at 24 V.

Low signal level: < 0.4 V
High signal level: 20 – 30 V

## 5.4.3 Outputs

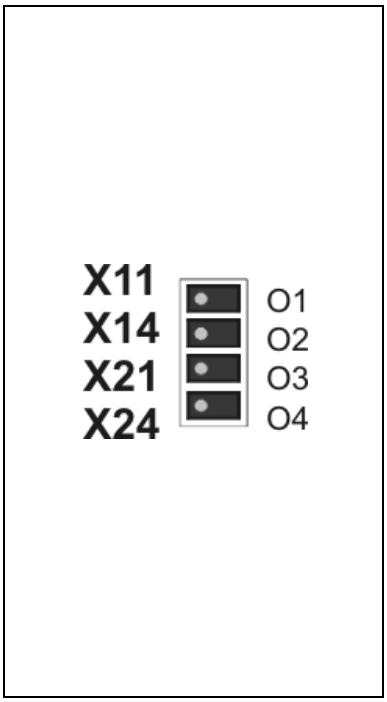


Fig. 38: Output connector

The overload-safe outputs are equipped with diodes to protect the internal circuitry. In the case of inductive loads (e.g. relay). Each output should be additionally wired with a protective diode mounted near the load in order to avoid EMC problems.

The outputs are specified for max. 500 mA output current.

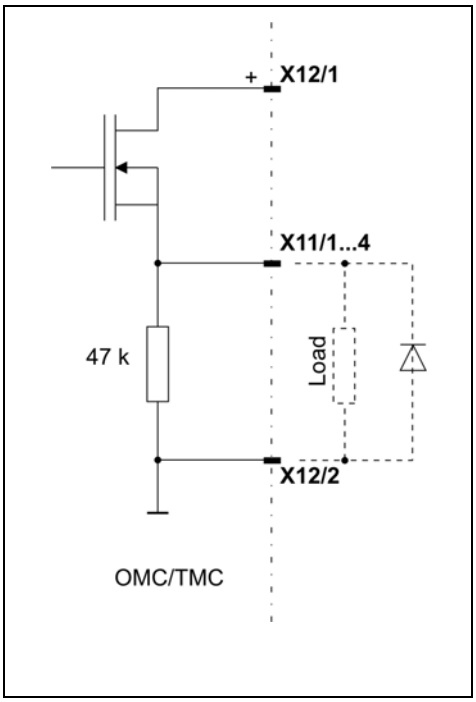


Fig. 39: Output wiring example

## 5.5 Wiring the Interface Connectors

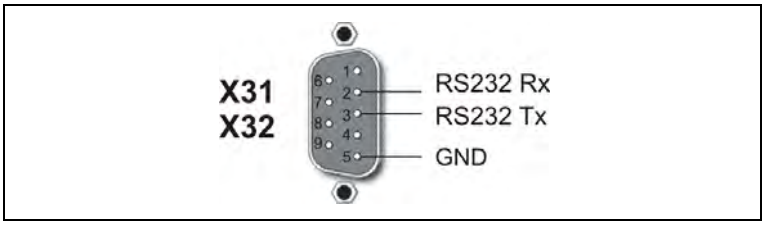


Fig. 40: 9 pin D-sub male connectors acc. to DIN 41652

RS 232 is provided as standard communication interface. Every controller is equipped with two identical interfaces (X31 and X32), e.g. a PC and a PLC can simultaneously be connected to the OMC or TMC.

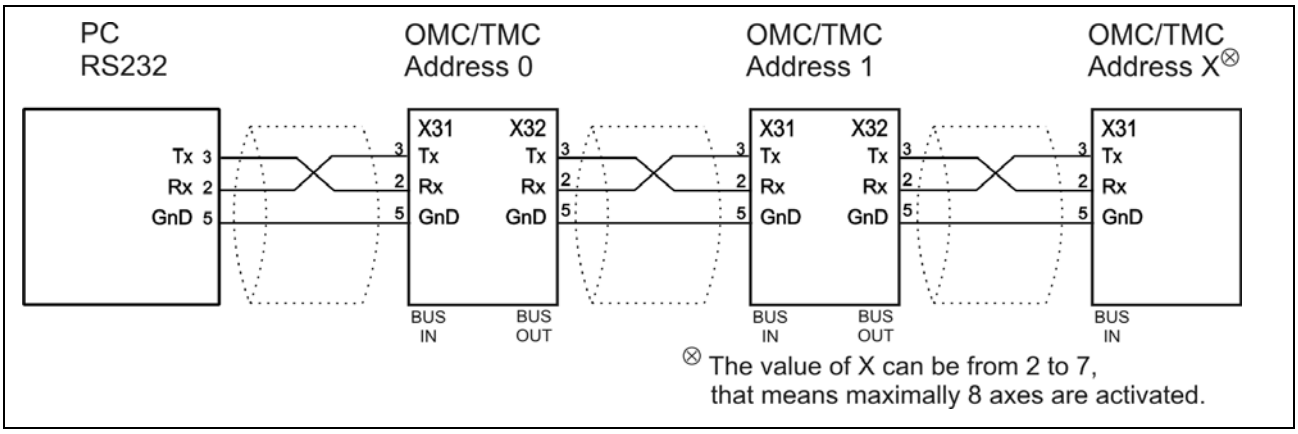


Fig. 41: Interface cable for stand-alone mode with RS 232

Option: Interface RS 485

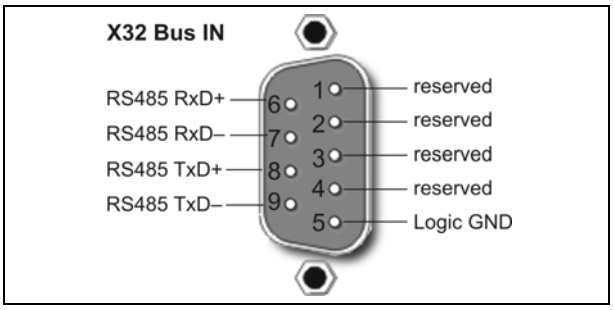


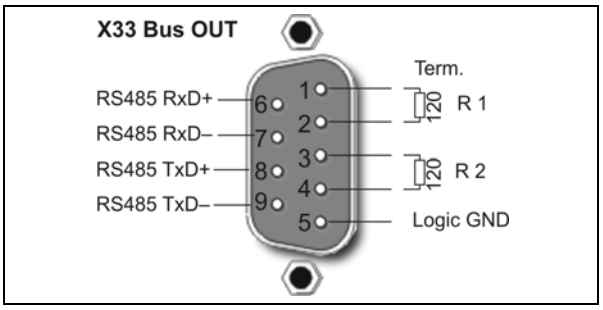


Fig. 42: Bus connection for serial interface

Setting at delivery:
115 200 Baud
8 Data bits
1 Stop bit
No parity
Protocol: <STX> | address | data | separator | checksum | <ETX> | <CR> | <LF>

**Baud rate** and **interface parameters** can be modified after installation of MiniLog-Comm in the menu item *Options/Interface* parameters see next chapter.

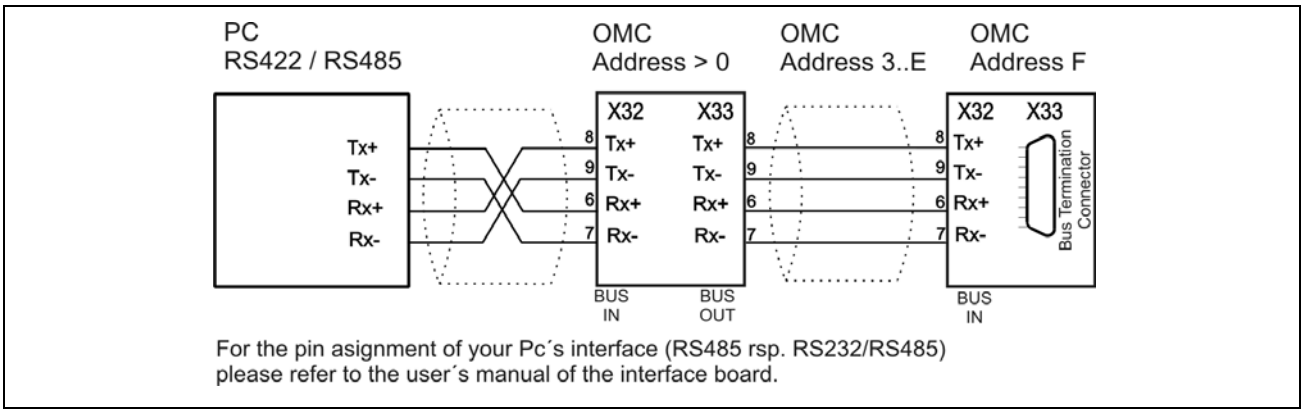


Fig. 43: Interface cable for stand-alone mode with RS 422/485 bus

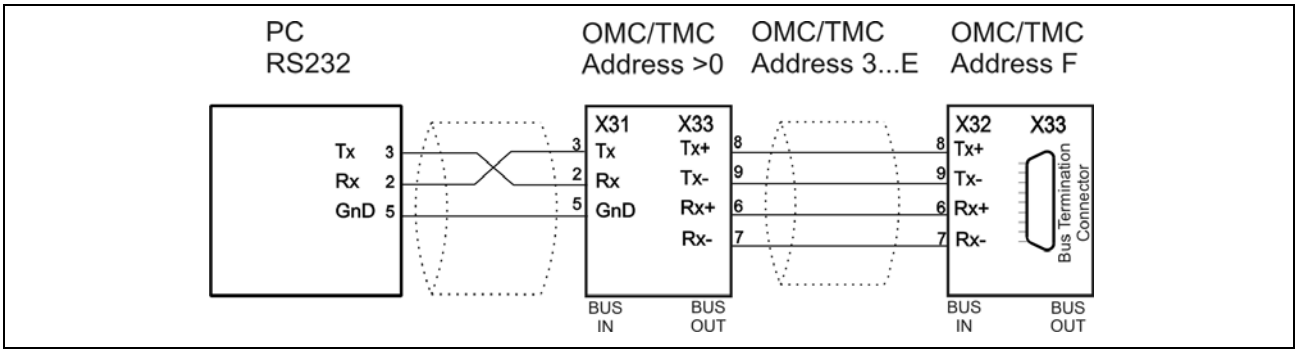


Fig. 44: Interface cable for master-slave mode with RS 232 on RS 485

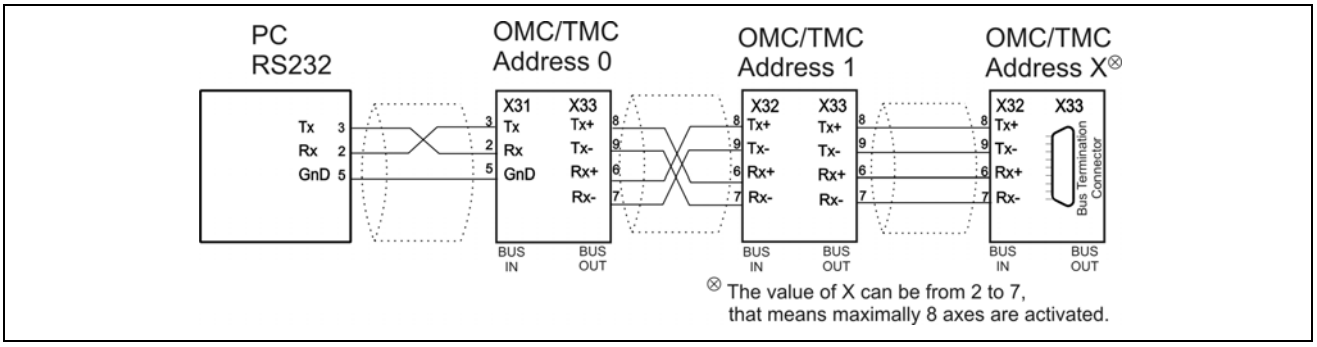


Fig. 45: Interface cable for master-slave mode with RS 485

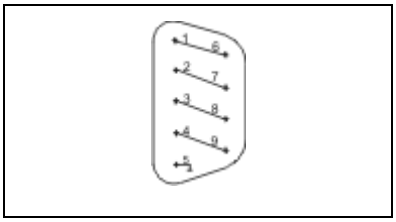

The bus connectors PIN 2 and 3 must not be connected!

For RS 232 no bus termination connector is necessary!

Fig. 46: Bus termination connector RS 485 to X33

A bus termination at the end of the bus must be applied to have well defined signal levels on the RS 485 bus. Each OMC/TMC contains bus terminator resistors, and by applying a dummy D-sub connector with 4 little bridges (fig. 46) in it, these termination resistors are switched onto the bus.

The bus termination connector is to be plugged onto the BUS OUT (X33) connector.

### Option Ethernet adaptor

The controller can be integrated into the firm's network by the Ethernet adaptor.
For telemaintenance the controller's data can be accessed by coworkers, who logged-on with the correct IP address.

The Ethernet adaptor is connected to the X31 connector.

**Important:** For a correct data exchange, the baud rate should be max. 57 600 Baud.

You'll find more information in the data sheet, sent with the adaptor.

**PC – Controller connection:**

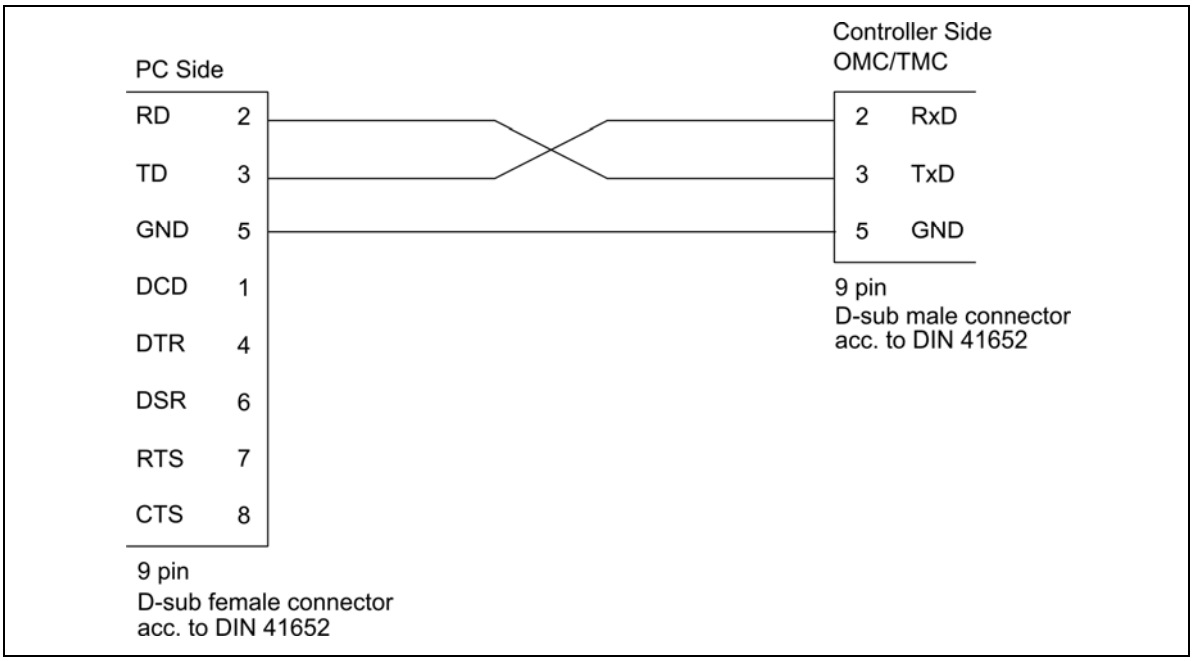


Fig. 47: PC (9 pin female connector) <-> Controller TMC/OMC

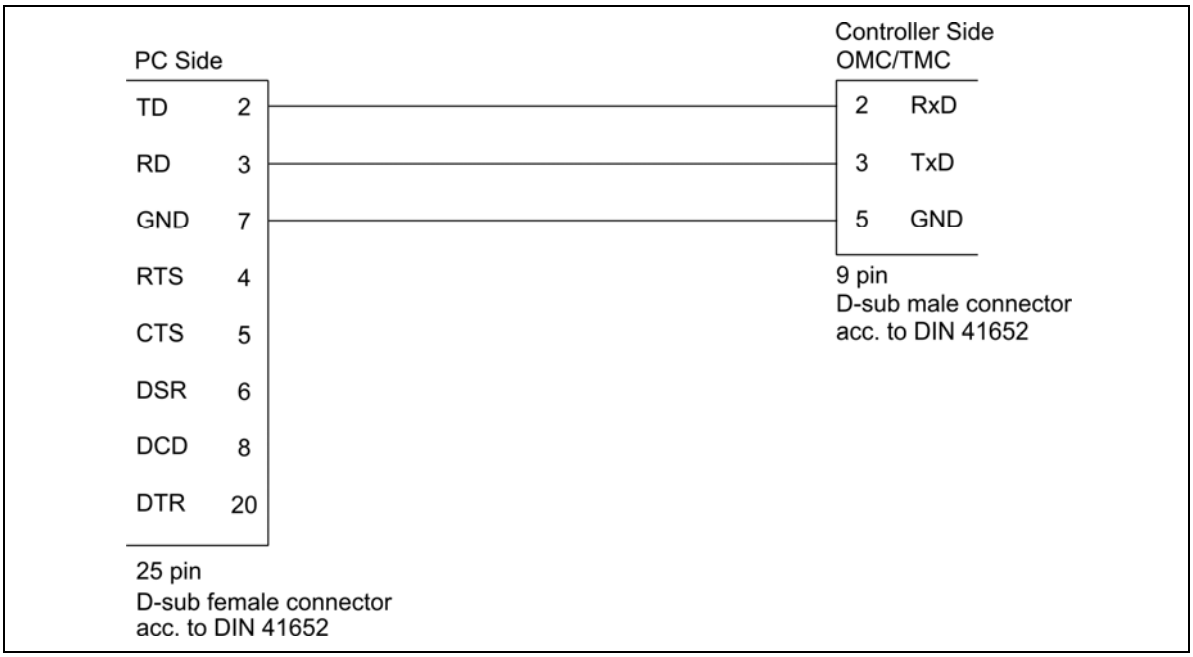


Fig. 48: PC (25 pin female connector) <-> Controller TMC/OMC

# 6 Putting into Service

Observe the safety instructions in chap. 2!

## 6.1 Test the Communication between Controller and PC

1. Connect the serial interface of the PC with the controller (X31), see p. 37.
2. Connect the 24 $V_{DC}$ logic supply voltage to the controller, X8 connector. The left green LED below the REMOTE/LOCAL switch should light.
3. The right LED signalizes that a system program has been downloaded. If the right LED does not light a system program has to be reloaded (see MiniLog-Comm, download of a system program).
4. Set the Remote/Local switch to REMOTE.
5. Switch on the PC.
6. Install the MiniLog-Comm program package delivered with the controller.
7. Select the required settings in MiniLog-Comm, menu item *Options*, and save them: controller type, interface parameters, transmission protocol and baud rate.

   If another transmission speed should be required, additional baud rates can be set by a programming instruction.

| **OMC and TMC Baud rates** | | | |
|---|---|---|---|
| Selectable per menu *Options/Interface* Parameters or programming instruction | | Only selectable per programming instruction | |
| 1200 | 19 200 | 300 | 3600 |
| 2400 | 38 400 | 600 | 7200 |
| 4800 | 57 600 | 900 | 14 400 |
| 9600 | 115 200 (on delivery) | 1800 | 28 800 |

**Baud rate programming instruction:**

**IC**p**S**nnn

| | |
|---|---|
| IC | Code: programming a baud rate |
| p | Port number 1 or 2 |
| S | Write (Schreiben) |
| nnn | Enter baud rate |

See chap. 7.9 (Data format transfer)

## 6.2 Test: Stepper Motor(s), I/Os and Limit Switches

If not done before, now inputs, outputs, limit switches and stepper motor(s) should be wired. Supply voltages should be wired after that!

Do not connect or disconnect screw terminals
as long as the matching supply voltage is on!

1. Switch on the logic supply voltage. The left green LED below the Remote/Local switch will light. The lighting right LED shows that a system program has been loaded.
2. Switch on the supply voltages for all I/O groups you need to use. Both green LEDs above the associated I/O group should light.
3. Start MiniLog-Comm.
4. Select menu item *Parameter* for motor current setting.

   Run current, stop current and boost current[1] can be set in the range 0 to 6.3 $A_{r.m.s.}$ independent from each another. Stage 1 = 0.1 $A_{r.m.s.}$ to stage 63 = 6.3 $A_{r.m.s.}$

   The settings are valid on delivery:
   Run current: 0.4 A, stop current: 0.2 A, boost current: deactivated

   **Important:**
   **Set motor currents corresponding to the motor winding parameters!**
5. In the menu item *Parameter* the step resolution can also be set in 8 stages between full step and 1/20 step. It is better to choose a high step resolution in most application situations, because the motor will run more smoothly.
6. After the motor currents have been set to suitable values you can test the motor's run by selecting the menu items *Transmission/Direct Mode* or *Transmission/Drive Mode.*
7. Menu item *Transmission/Direct Mode*
   Many customers are already familiar with MiniLog program instructions. They can enter all types of MiniLog instructions into a dialog box. The instruction is executed at once.
   Example: Enter *X+200*
   The motor axis 1 drives 200 steps in direction +. The corresponding instruction for the other motor would be: *Y+200*.

---

[1] **Run current** is the motor's rated current for normal operation without acceleration or deceleration phases.

**Stop current** is a reduced current for motor standstill (about 50% of the run current).

**Boost current** is the motor current for acceleration and deceleration. During these phases the motor needs more energy as during constant speed.
The boost current should be set to 120 to 130% of the run current. On delivery, boost is deactivated, that means the motor will always run with the selected run current.

8. An icon in the menu bar opens the following dialog box (*Transmission/Direct Mode*) which enables you to drive the motor per mouse click.
9. Simply click on one of the buttons Axis 1– (direction), Axis1+, Axis2–, Axis2+. Direction + means clockwise, seen onto the motor axis from outside.

   If the motor should move in the wrong direction, exchange the connecting leads of one motor phase, e.g. A and B.

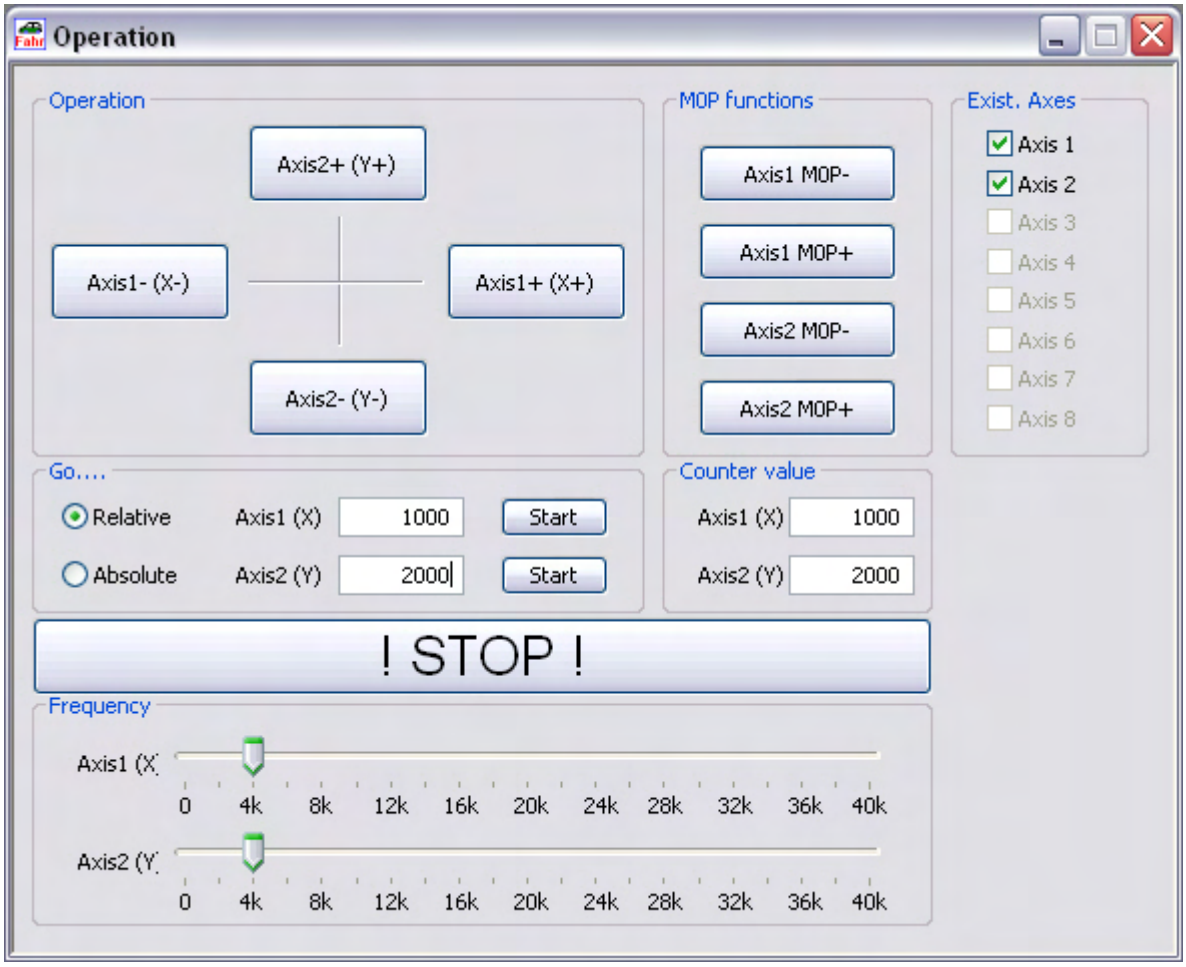


10. If the axis numbers 1 and 2 are coordinated wrong, you can "exchange" the axes by clicking on the button "X <-> Y".
11. You can enter drive instructions for both axes into the window "Drive relative ... The symbol + or – before the entered number of steps defines the direction. When you click on the button "Start" the instruction will be executed. Now the button has the marking "!STOP!" in order to cancel the movement if required.
12. In the column "Existing Axes" the program indicates which axes can be operated with. This information only refers to the power stage state. The program does not recognize whether a stepper motor is connected or controlled with a suitable current setting.

13. With two slider controls at the botton of the window you can change the drive frequencies of both motors.
14. You can initialize each axis with click on one of the buttons "Axis1 MØP" or "Axis2 MØP". After start the button has the marking "!STOP!" to cancel initializing if required.
15. Another MiniLog-Comm window allows to test inputs and outputs. Only those I/O groups which are powered will be recognized by MiniLog-Comm!
16. So many I/O componentries are identified as there are axes:

| Axes I/O | Outputs | Inputs |
|---|---|---|
| 1 | 1 to 8 | 1 to 16 |
| 2 | 1 to 16 | 1 to 32 |

# 7 Operation of the OMC/TMC

## 7.1 Linear and Circular Interpolation

The controllers are applicable for more complex processes and motion sequences by:

- Changes of frequency and target position during the run in the OMC and TMC
- Linear and circular interpolation in the TMC

  Starting point of the circular interpolation is the description of the curve in parameter form (radius, beginning and terminator point, center of the circular arc, direction of rotation).

  The sequence programs with linear and circular interpolation routines are quickly programmed in a simple way in MiniLog language by MiniLog-Comm.

  See also the manuals MiniLog and MiniLog-Comm.

## 7.2 The "phytron Programming Language" MiniLog

The "phytron Programming Language" MiniLog is welltried for editing sequential programs for machine controllers.

Complete sequential programs can be realized with MiniLog: drive instructions, initializing axes, sub programs, jump instructions, reading and setting registers and many other special instructions.

See MiniLog programming manual (separate manual).

Each controller can store MiniLog programs with up to 2000 program lines at 32 characters each.

For editing and managing MiniLog programs, the MiniLog-Comm communication software for PC is delivered together with the controller. Actual MiniLog-Comm program versions can be downloaded from the phytron homepage: http://www.phytron.de/

In the MiniLog-Comm menu item *File/new* you can enter and edit parameters, sequential programs and registers.

## 7.3 Structure of the Programming Instructions

The programming instructions are designed according to the following scheme:

| | | |
|---|---|---|
| **X**rvalue | **X** | Bold characters are instruction code. These characters are to be entered without modification. |
| | r | Light characters are to be exchanged by certain characters. |

Example:

| | | |
|---|---|---|
| **X**+1000 | **X** | Relative drive instruction to axis X: Drive 1000 steps in direction +. |
| | r | Enter + or – for the direction of motor run. |
| | zvalue | Now a number has to be entered. In this case the displacement value, e.g. 1000. The engineering unit for this input is steps. |

For all programming instructions as well as program examples please refer to the MiniLog programming manual.

## 7.4 Design of MiniLog Programs

- MiniLog programs consist of up to 2000 program lines. Each line may have up to 32 characters. The program lines are numbered consecutively by MiniLog-Comm.
- The single instructions in each line must be separated by blank characters.
- Do not insert extra blank characters within an instruction.
- The instructions will be executed serially.
- Jump instructions or subroutines can be defined by means of the line numbers.
- Parameter and register values should be defined at the beginning of a program.
- Line numbers, parameter numbers as well as register numbers may be entered with or without preceding zeros.
- Example: R0001 or R1

  Program names: up to 8 characters

You'll find all programming instructions in the MiniLog programming manual.

## 7.5 Parameters

For operating a stepper motor controller several presettings as speeds, acceleration ramps or waiting times are required. These presetting are called "PARAMETERS".

On delivery, default parameters are stored which can be used in several applications. With MiniLog-Comm you can read out and edit these parameters.

In the list of parameters also several counters are contained, which will be continuously actualized by the program. The counters can be read out and some of them can be edited, too.

- For each axis separate parameters have to be set. Before the parameter number, insert an X or Y to mark the axis (also valid: 1 or 2).

  Example: XP15 is the acceleration ramp value for axis X.
- Parameters (e.g. speeds) may be modified several times within a program.
- Parameter values can be entered or read.
- P18 to P21 are counters. They will be actualized by the program during axis movement.
- P26 to P45 are special parameters for OMC and TMC.

| List of Parameters | | |
|---|---|---|
| **No.** | **Meaning** | **Default** |
| **P01** | Type of movement<br>0 rotational<br>Rotating table, 1 limit switch for mechanical zero (referencing)<br>1 linear, for XY tables or other linear systems, 2 limit switches:<br>Mechanical zero and limit direction –<br>Limit direction + | 0 |
| **P02** | Measuring units of movement<br>1 step<br>2 mm<br>3 inch<br>4 degree | 1 |
| **P03** | Conversion factor for the thread<br>1 step corresponds to ...<br>Computing the conversion factor:<br>$Conversion\,factor = \frac{Thread}{Number of\ steps\ per\ revolution}$<br><u>Example</u>:<br>4 mm thread pitch<br>200-step motor = 400 steps/rev. in the half step mode<br>$Conversion\,factor = \frac{4}{400} = 0.01$ | 1 |
| **P04** | Start/stop frequency<br>The start/stop frequency is the maximum frequency to start or stop the motor without ramp. At higher frequencies, step losses or motor stop would be the result of a start or stop without ramp. The start/stop frequency depends on various factors: type of motor, load, mechanical system, power stage.<br>The frequency is programmed in Hz. | 400 |
| **P07** | Emergency stop ramp<br>The frequency is programmed in Hz/s. | 50 000 |
| **P08** | $f_{max}$ MØP (mechanical zero point)<br>Run frequency during initializing (referencing)<br>Enter in Hz | 4000 |

| List of Parameters | | |
|---|---|---|
| **P09** | Ramp MØP<br>Ramp during initializing, associated to parameter P08<br>Enter in Hz/s | 25 000 |
| **P10** | $f_{min}$ MØP Run frequency for leaving the limit switch range<br>Enter in Hz | 400 |
| **P11** | MØP offset for limit switch direction +<br>Distance between reference point MØP and limit switch activation<br>Unit: is defined in parameter P02 | 0 |
| **P12** | MØP offset for limit switch direction –<br>Distance between reference point MØP and limit switch activation<br>Unit: is defined in parameter P02 | 0 |
| **P13** | Recovery time MØP<br>Time lapse during initialization<br>Enter in ms | 20 |
| **P14** | $f_{max}$ Run frequency during program operation<br>Enter in Hz (integer value) see chap. 7.6 | 4000 |
| **P15** | Ramp for run frequency (P14)<br>Input in Hz/s (integer value)<br>OMC: 100 Hz/s to 4 MHz/s<br>TMC: 1000 Hz/s to 4 MHz/s | 25 000 |
| **P16** | Recovery time Position<br>Time lapse after positioning<br>Input in ms | 20 |
| **P17** | Boost (defined in P42)<br>0 off<br>1 on during motor run<br>2 on during acceleration and deceleration ramp<br><u>Remarks:</u><br>The boost current can be set in parameter P42.<br>With parameter P17 you can select in which situations the controller switches to boost current.<br>P17 = 1 means, the boost current always is switched on during motor run. During motor standstill the controller switches to stop current. | 0 |

| | | |
|---|---|---|
| **List of Parameters** | | |
| **The following four parameters are counters normally set by the program.<br>In the MiniLog-Comm parameter editor these parameters are not displayed!** | | |
| **P19** | Electronical zero counter<br>Used for setting operating points. At standstill of the axis, P19 can be read or programmed during program execution. | |
| **P20** | Mechanical zero counter<br>This counter contains the number of steps referred to the mechanical zero (MØP). Can be read at axis standstill. If the axis reaches the MØP, P20 will be set to zero. | |
| **P21** | Absolute counter<br>Indicates the true position. At any time P21 can be asked, programmed or modified.<br>P21 is not automatically set to zero when the MØP is reached. | |
| **P22** | Encoder counter<br>Indicates the true encoder position. | |
| **Parameters 26 to 45 are specially adapted to the OMC and TMC controllers:** | | |
| **P26** | Divider for SSI encoder<br>Data transfer rate 10 to 80 (= 100 to 800 kHz) | 0 |
| **P27** | Proximity switch type<br>0 = + and – are PNP normally closed contacts (NCC)<br>1 = + is a normally open contact (NOC), - is a NCC<br>2 = + is a NCC, - is a NOC<br>3 = + and – are PNP NOC | 0 |
| **P28** | Output motor brake<br>Define the output number for the motor brake<br>Input for OMC: 1 - 8<br>for TMC: 1 - 16<br>Example: output number = 4<br>The output 4 is set in case of an error in the power stage. | 0 |
| **P29** | Delay time for enabling motor brake<br>The delay time after switch-on for releasing the brake<br>Input in sec | 0 |

| List of Parameters | | |
|---|---|---|
| **P30** | Frequency band setting<br>0 = manual<br>1 = automatic<br>Remark: See chap. 7.6<br>It is recommended to work with the automatic setting mode.<br>For each run frequency (P14) and ramp (P15) the controller automatically selects suitable settings. | 1 |
| **P31** | Frequency and ramp predivider (only if P30 = 0, manual)<br>See chap. 7.6<br>Predivider values: 3 or 5 (OMC: 5, TMC: 3)<br>This parameter can be used for individual settings for special applications. | 3 |
| **P32** | Positioning ramp shape<br>0 = s-shape<br>1 = linear ramp<br>Remark: The s-shape ramp can be modified with P33 parameter. | 1 |
| **P33** | Arc value setting for s-shape ramp<br>Values: OMC: 1 to 8191<br>TMC: 1 to 32767<br> 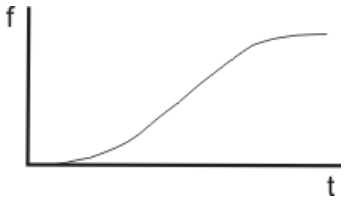 <br>P33: low value<br> 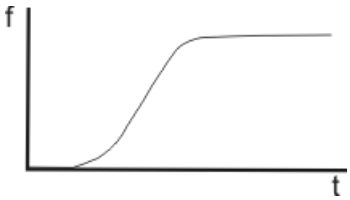 <br>P33: high value | 1 |
| **P34** | Encoder type<br>-1 = no encoder<br>0 = incremental 5.0 V<br>1 = incremental 5.5 V<br>2 = serial interface SSI binary Code 5.0 V<br>3 = serial interface SSI binary Code 5.5 V<br>4 = serial interface SSI Gray Code 5.0 V<br>5 = serial interface SSI Gray Code 5.5 V | 0 |
| **P35** | Encoder resolution for SSI encoder<br>Enter max. encoder resolution in Bit (max. 32 Bit) | 10 |

| List of Parameters | | |
|---|---|---|
| **P36** | Encoder function<br>0 = counter<br>1 = SFI dynamical step failure indication | 0 |
| **P37** | Encoder tolerance for SFI<br>Enter tolerance value for SFI evaluation | 0 |
| **P38** | Encoder preferential direction of rotation<br>0 = + (positive)<br>1 = – (negative) | 0 |
| **P39** | Encoder conversion factor<br>1 increment corresponds to ... | 1 |
| **P40** | Stop current in 0.1 A steps<br>Values: 0 to 6.3 A<br>Input: 0 to 63 | 2 |
| **P41** | Run current in 0.1 A steps<br>Values: 0 to 6.3 A<br>Input: 0 to 63 | 4 |
| **P42** | Boost current as absolute value in 0.1 A steps which is not added to the run current.<br>Values: 0 to 6.3 A<br>Input: 0 to 63 | 4 |
| **P43** | Current delay time in ms | 20 |
| **P44** | Control pulses change over<br>0 = power stage X (Y) on controller X (Y)<br>1 = power stage X (Y) on controller Y (X)<br>2 = external control pulses on power stage X (Y) | 0 |
| **P45** | Step resolution<br>0 = Full step 3 = 1/5 step<br>1 = Half step 4 = 1/10 step<br>2 = 1/4 step 5 = 1/20 step<br>6 = 1/8 step | 4 |

## 7.6 About Parameters 30 and 31

The motor controller is parameterized by several chip internal values as frequency and predivider. In the automatic mode (P30 = 1) these two parameters are automatically derived by software from the physical units indicated by the MiniLog parameters P14 (run frequency) and P15 (ramp). Due to the binary chip design, only certain combinations of frequencies and ramps can be used.

| Controller | Predivider | $f_{max}$ [Hz] | $f_{resolution}$ [Hz] |
|---|---|---|---|
| **OMC** | 1 | 16 383 | 1 |
| | 2 | 32 767 | 2 |
| | 3 | 65 535 | 4 |
| | 4 | 131 071 | 8 |
| | 5 | 262 143 | 16 |
| **TMC** | 1 | 65 535 | 1 |
| | 2 | 131 071 | 2 |
| | 3 | 262 143 | 4 |

Fig. 49: Predivider/frequencies/resolution

Predivider: Defines a frequency range.

$f_{max}$: Maximum frequency in this range

$f_{resolution}$: Minimum distance between two accessible frequencies

Remark: Frequency and destination position can be changed during the run!

Snap regula for manual frequency band setting:

| | |
|---|---|
| Little frequency – very exactly setting: | Select a low predivider value.<br>In this case the ramp will be flat.<br>Steep ramps are not possible with a low predivider value. |
| Steep acceleration ramp:<br>(nearly rectangle profile) | Select a high predivider.<br>In this case you'll get a coarse frequency grid. |

## 7.7 Registers

- The OMC and TMC controllers contain 1000 memory locations used to store variables, called registers within MiniLog programs.
- The registers are numbered with R1 to R1000.
- In each register numbers with up to ten digits can be entered. Decimal values are also programmable. Before and after the decimal point up to nine digits may be entered. The total number of digits must not exceed 10.
- If possible, the registers should be programmed in the first program lines.

| | | |
|---|---|---|
| Write value into a register: | **R**nnnn**S**zz | |
| Read value of a register: | **R**nnnn**R** | |
| Explanations: | **R** | instruction code: register |
| | nnnn | Register number |
| | **S** | Write (Schreiben) |
| | zz | number (maximum 10 digits) |

- Within the program registers can be used for indirect input of positions. Combined with arithmetic calculations registers can be used as counters during program run.
- Please notice for all logic combinations or arithmetic calculations with registers. The computed value will always be written into the first register named in the instruction.

| | |
|---|---|
| Example | Addit the values of two registers |
| R18+R2 | The value of register 2 is added to the value. The result will be stored in register 18. |

- Compare register values
  As the result of a comparison, a condition byte will be set by the program:
  **E** = condition fulfilled,
  **N** = condition not fulfilled.
  The status of the condition byte can be used for a conditional jump, subroutine instructions or other operations.

| | |
|---|---|
| Example | Comparison of a register value with a number and conditional jump. |
| R999=1 NE11 N77 | If register 999 contains the value 1, jump to line 11, if not, jump to line 77. |

## 7.8 Programming Instructions

The most important types of instruction are listed in the following table. You'll find the instructions in the attached MiniLog programming manual.

| | |
|---|---|
| Automatic start | Register instructions, arithmetical operations and comparisons with numbers or registers |
| Axis requests: standstill, error conditions | Request inputs<br>- with AND link<br>- with ODER link |
| Dialog | Set currents |
| Drive instructions, absolute, relative or linked with inputs or register values | Set incremental encoder to zero, request encoder value or write it into a register |
| Emergency monitoring | Set outputs |
| Initializing the axes | Set step resolution |
| Jump instructions: relative, absolute, conditional | Status requests, with or without conditional link |
| Program interruption | Subroutines |
| Read input status | Time loops |
| Read output status | Wait for input status |

## 7.9 Programming Examples

### AD Converter Board

| Line number | Program | Comment |
|---|---|---|
| LNR1 | *START* | |
| LNR2 | R1SAD0C0 | Register 1 is set with AD card 0 Ch 0 |
| LNR3 | R2SAD0C1 | Register 2 is set with AD card 0 Ch 1 |
| LNR4 | R3SAD0C2 | Register 3 is set with AD card 0 Ch 2 |
| LNR5 | R4SAD0C3 | Register 4 is set with AD card 0 Ch 3 |
| LNR6 | R1W1 | The value of register 1 is displayed in line 1 |
| LNR7 | R2W2 | The value of register 2 is displayed in line 2 |
| LNR8 | R3W3 | The value of register 3 is displayed in line 3 |
| LNR9 | R4W4 | The value of register 4 is displayed in line 4 |
| LNR10 | N*START* | Jump back to Start |

| Line number | Program | Comment |
|---|---|---|
| LNR1 | E^1R2R NN+1 X=H NE+1 XS H A1R2R | Reading 2 inputs, if both are 0<br>and the motor is running, then stop the motor<br>if not, continue to next line. If the motor is out of action, reset output 1 and 2 |
| LNR2 | E^1S2R NN+1 X=H NN+1 XL+ A1S | If the first input 1 and motor is out of action, then start running in + direction and set output 1 |
| LNR3 | E^1R2S NN+1 X=H NN+1 XL- A2S | Input 2 = running in – direction<br>and set output 2, if the motor runs. |
| LNR4 | E^3S NN+1 X=H NN+1 N+3 | If input 3 1 and motor is out of action, then reference run on initiator, then continue program in line 1. |
| LNR5 | E^4S NN-4 X=H NN-4 N+3 | If input 4 1 and motor is out of action, then<br>positioning relatively. |
| LNR6 | N1 | Return to line 1 |
| LNR7 | X0- A3S H A3R N1 | Execute reference run on initiator – direction and wait until motor is out of action, then return to line 1.<br>Set output 3 during reference run |
| LNR8 | X+1000 A4S | Positioning 1000 steps in + direction. Set output 4 during positioning. |
| LNR9 | E^5S1 NN+1 XS H A4R N1 | Wait here until input 5 1, then stop motor and return to program start, if positioning is finished |
| LNR10 | X=H NN-1 A4R N1 | Positioning finished? If yes, then reset output 4 and return to line 1 |

## 7.10 Storing Programs, Parameters and Registers

Programs and parameters can be edited with MiniLog-Comm, transferred to the controller and stored. During program run registers and counters can be modified by the program. As long as the controller is powered these data are stored. After switching off the controller, these data will be handled dependent on the built-in type of memory components:

| | |
|---|---|
| OMC and TMC<br>standard version | **Flash EPROM Memory**<br>Register or counter values modified by the program will <u>not</u> be stored when you switch off the controller.<br>If these data are further required, they should be stored with MiniLog-Comm before switching off and transmitted to the controller again. |
| Optional | **Zero-Power-RAM (Dallas RAM)**<br>Register or counter values modified by the program will be stored when you switch off the controller. When the controller is switched on again these data are still in the controller's memory. |

## 7.11 Data Transfer without MiniLog-Comm

**Data format:**

No Parity

1 Stop bit

8 Bit ASCII-Code

115 200 Baud

All **instruction strings** must have the following format: **STX Data ETX CR LF**
Control characters: see ASCII table

The programming instructions are listed in the MiniLog programming manual.

**Program example: Controlling via RS 232 interface (GW-BASIC)**

| | |
|---|---|
| 10 OPEN “COM1:115 200, N,8;1,RS,CS0,DS0,ASC,LF”AS#1 | Interface initializing :<br>COM1 = interface,<br>115 200 = Baud rate,<br>N = Parity,<br>8 = Bits per character,<br>1 = Stop bit,<br>RS = suppressed recognizing of a transmission request,<br>CS0 = error waiting time Clear-TO-Send wire (CTS) in milliseconds,<br>DS = error waiting time on Data-Set-Ready wire (DS) in milliseconds,<br>ASC = ASCII mode<br>LF= LF= sends line feed after the **CR** |
| 20 INPUT A$ | Instruction input at the computer keyboard |
| 30 PRINT #1,CHR$(2)+A$+CHR$(3) | Transmitting a string to the controller<br>CHR$(2) = **<STX>,**, CHR$(3) = **<ETX>** |
| 40 INPUT #1,B$ | Read the controller's answer string. The computer waits until an **<LF>** will be transmitted from the controller. |
| 50 PRINT B$ | The answer string will be displayed on the monitor. |
| 60 GOTO 20 | Jump to line 20 |
| 70 END | Program end |

# 8 ESD Protective Measures

All the products which we deliver have been carefully checked and submitted to a long-term test. To avoid the failure of components sensitive to electrostatic discharge (ESD), we apply a great number of protective measures during manufacturing, from the component input check until the delivery of the finished products.

Manipulation of ESD sensitive devices must be effected by respecting special protective measures (EN 61340–5). Only return the modules or boards in adapted packaging.

phytron's warranty is cancelled in case of damages arising from improper manipulation or transportation of ESD modules and components.

# 9 Warranty and Trade Marks

## 9.1 Warranty

The OMC and TMC controllers are subject to legal warranty. phytron will repair or exchange devices which show a failure due to defects in material or caused by the production process. This warranty does not include damages which are caused by the customer, as there are, for example, not intended use, unauthorized modifications, wrong treatment or wrong wiring.

### 9.2 Trade Marks

In this manual several trade marks are used which are no longer explicitly marked as trade marks within the text. The lack of this signs may not be used to draw the conclusion that these products are free of rights of third parties.

MiniLog-Comm is a trade mark of the Phytron-Elektronik GmbH.

Microsoft is a registered trade mark and WINDOWS is a trade mark of the Microsoft Corporation in the USA and other countries.

# 10 Index


**A**

AC supply 27
AD 11
AD converter 12
Address switch 10
Ambient temperature 19

**B**

Basic position signal 31
Baud rate 35, 38
Boost current 39
Bus operating mode 9
Bus termination 36

**C**

Cable clamp 24, 25
Circular interpolation 42
Control pulse output 30
Controller board 7

**D**

Dallas RAM 53
DC supply 26
Dimensions 18

**E**

Earthing screw 24, 25
EMC 22, 24, 25
Ethernet adaptor 37

**F**

Fan 19
Flash EPROM 53
Full step 7

**I**

I/O board 32
Input level 34
Installation 14
Interface 35, 44

**L**

LED 28, 33, 38
Limit switch 29
Linear interpolation 42
Load capacitor 7
Logic supply voltage 28
Low voltage error 7, 26

**M**

Mains transformer 25
Master-slave mode 9
Mini step 7
MiniLog 42, 44
MiniLog-Comm 4, 35, 39
Motor cable 24
Motor current 7
Motor voltage 25
Mounting 17, 19
Multi-axle mode 9

**O**

OMC 4
Open collector control 31
Operating mode 4, 8, 9, 10, 32, 35, 36
Operator panel 32
Options 11
Overtemperature 7

**P**

PE 24
PELV 15
Phase current 22
Power supply 25, 27
Program line 44
Programming instructions 43, 52
Protective diode 34
Protective ground 25

Protective measure 15
Push-pull control 31
Putting into Service 38

**R**

Rail mounting 18
Rectifier 7
REMOTE 8
Reset push button 8
RS 232 8, 35, 36
RS 422 36
RS 485 8, 35, 36
Run current 39

**S**

Screw connectors 6
Service interface 6
SFI 11
Shielding mesh 24
Stand-alone mode 9
Stepper motor 22
Stop current 39

**T**

Test 38
Thread holes 19
TMC 4
Touch voltage 16

**V**

Ventilation 19

**W**

Wall mounting 18
Weight 17
Winding inductivity 22
Winding resistance 22

**X**

X31 8
X32 8
X33 8, 36

**Z**

Zero Power RAM 53

**Phytron-Elektronik GmbH • Industriestraße 12 • 82194 Gröbenzell, Germany**
**Tel. +49(0)8142/503-0 • Fax +49(0)8142/503-190 • E-Mail info@phytron.de • www.phytron.de**

**Phytron, Inc. • 600 Blair Park Road Suite 220 • Williston, VT 05495 USA**
**Tel. +1-802-872-1600 • Fax +1-802-872-0311 • Email info@phytron.com • www.phytron.com**